Alternatives to cabling in future large scale neutrino experiments

LDRD Proposal

(Zelimir Djurcic, Gary Drake, Maury Goodman, Jon Paley)

High Energy Physics Division

Argonne National Laboratory

Example of the future large ν project: LBNE (long baseline ν exp)

-Large size detectors (H_2O,LAr)
-Many PMTs (or MCPs), readout channles, signal and HV cables.

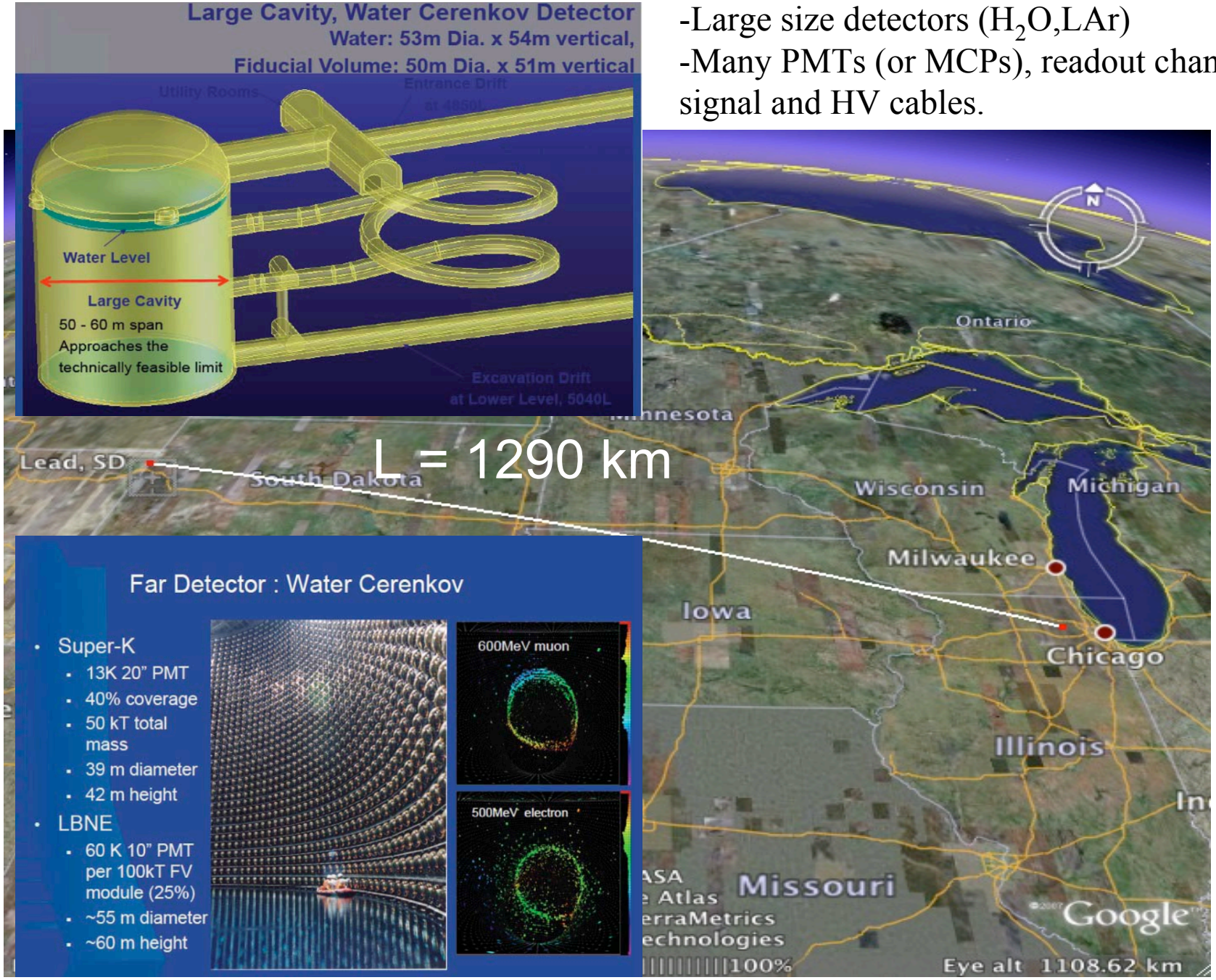

Alternatives to Cabling: Wireless Electronics for Data and Power Transfer

Motivation: Saves thousands of miles of cables, reducing cost and complication.

Wireless Data Transfer

-Use EM waves (RF).
-Can make use of commercial cell phone technology.
-Has the potential to be very cost effective.
-Conventional technology always updated, bags fixed.
-Every channel its own frequency by encoding, no interference.
-May need a higher frequency underground (water, rock).
-Use local receiver from each channel, then transmit upward.
-Don't need line-of-sight transmission.
-Don't need optics.
-Can be low power.
-At the time scale of LBNE higher frequency bands will be available.
-Can think of more general applications.

Wireless Data Transfer (cintinued)

LBNE Cerenkov detector R&D likely to copy a lot from SK experience; they specified required data transfer to be ~1.5 MBps (for 24 channels, see Backup Slides).

Required data transfer speed already in the range of current wireless standards & data speeds (for example 3G wireless phone standards, WiFi standards).

If higher frequency band needed with high transfer rate:
60 GHz wireless technology planned (for example, by Wireless Gigabit Alliance (WiGig), IEEE, etc).
WiGig established a specification for 60 GHz wireless technology that can offer used data transfer speed ranging 1-6 Gbps. (but do we need this much?)
(all well within time scale of mentioned neutrino experiment)

Wireless power transmission

Cut cabling complication and/or lead to clean sources of electricity + many other everyday uses.

-old method: inductive coupling → short distances
-new method: resonant coupling i.e. non-radiative energy transfer → "longer" distances (preliminary work by MIT, ~2 meter distance)
-microwave transmission over a very long distance (rectifying antenna (rectenna) converts microwave energy into DC electricity).
-laser: power can be transmitted by converting electricity into a laser beam that is then pointed at a solar cell receiver (to charge batteries attached to PMTs?)

From news (see for example msnbc.com, April 13, 2009):
"PG&E makes deal for space solar power: Utility to buy orbit-generated electricity from Solaren in 2016, at no risk":

"…Solaren would generate the power using solar panels in Earth orbit and convert it to radio-frequency transmissions that would be beamed down to a receiving station in Fresno, PG&E…"

Backup Slides

New front-end electronics, QBEE

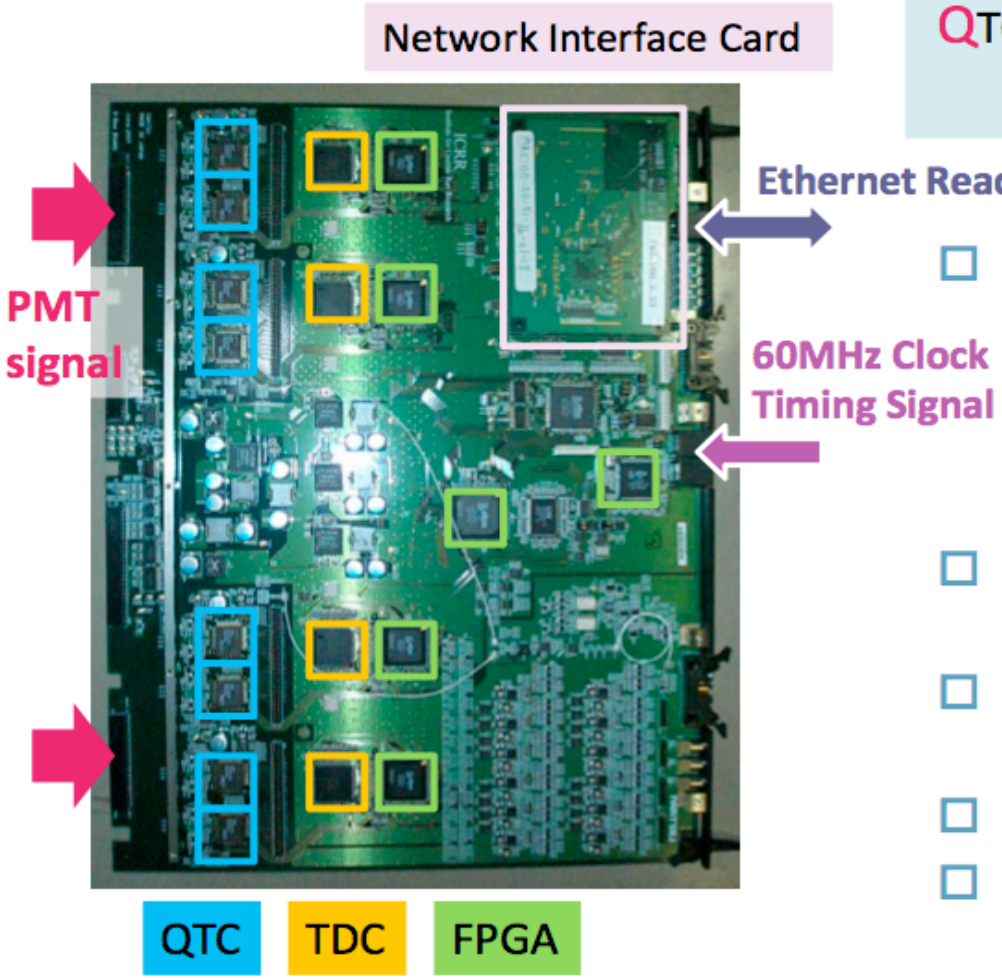

QTC-Based Electronics with Ethernet (QBEE or QB)

- 24 channel input
  - QTC (custom ASIC)
  - multi-hit TDC (AMT3)
  - FPGA
- External clock (60MHz) input
  Serial timing signal input
- Ethernet readout
- On-board calibration pulser
- Low power consumption (< 1W/ch)

Shoei Nakayama, “New Electronics Development for Super-Kamiokande”.

Ethernet readout and QBEE throughput

Custom Network Interface Card

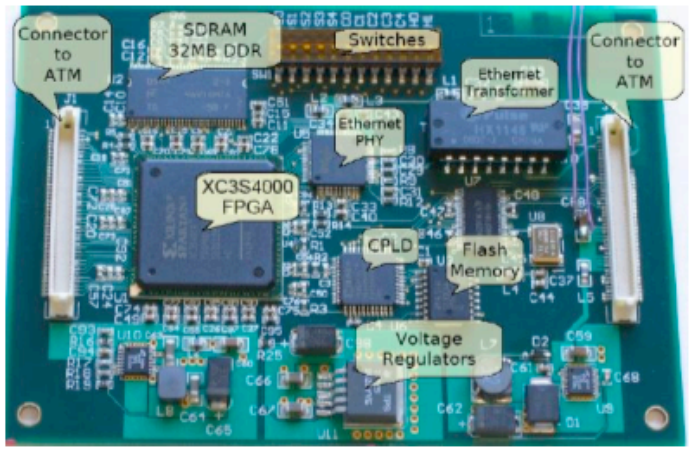

TCP/IP firmware (SiTCP) by
T. Uchida (Univ. of Tokyo)

Hardware and firmware by Boston-U

- Each card has IP address
- 32MB SDRAM
- Data readout : TCP
  Control (resister R/W) : UDP

QBEE throughput from analog input to a readout PC

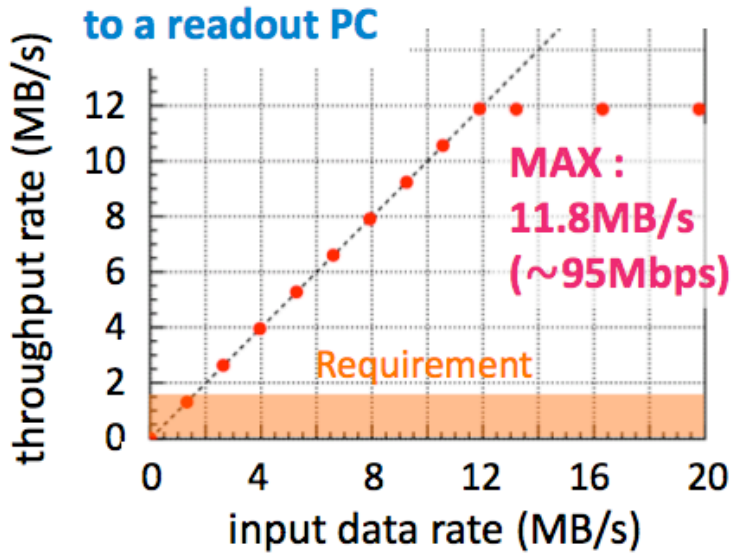

- Required data transfer speed :

(PMT dark noise) 10kHz x 6byte x 24ch
= 1.5MB/sec/board

→ Fast enough. Reaches the theoretical limit of 100BASE-TX !!

Shoei Nakayama, “New Electronics Development for Super-Kamiokande”.

Argonne National Laboratory seeks solutions to pressing national problems in science and technology. The nation's first national laboratory, Argonne conducts leading-edge basic and applied scientific research in virtually every scientific discipline. Argonne researchers work closely with researchers from hundreds of companies, universities, and federal, state and municipal agencies to help them solve their specific problems, advance America 's scientific leadership and prepare the nation for a better future.