MCP Storage and Transport

Jason McPhate

LAPP MCP Godparent Review

30 April 2011

MCP Transport Container Design Criteria – Material

- Maintain cleanliness
  - Protect from external particulates and produce no particulates
  - Low outgassing so as not to contaminate the surfaces
- Protect from physical damage
  - Prevent marring of surface (both from external threats or internal parts)
  - Strong enough to withstand vacuum packing and typical mishandling during shipping
- Reusable
  - Easily cleanable, without too much water absorption
  - Flexible design to handle different thicknesses
- Low ESD material
  - Prevents charging which can cause collection of particulates

- **Adds up to an all metal enclosure, preferably stainless.**

MCP Transport Container Design Criteria – Mechanical

- MCP not part of the support stack of the container
  - MCP held by spring rather than "hard" between two plates
- Hold the MCP by the minimal surface possible
  - Preferably outside the active area
- Retainers must not damage or be abraded by the MCP
  - Free of rough edges, burrs – don't damage the MCP
  - Don't react with the MCP or particulate from contact with MCP rough edge
- Tolerance parts or design so as to prevent motion of internals
- Provide secure and easy open/close lid constraint
- Easy to use
  - Facilitate safe installation and removal of the MCP

Design Example I
Photonis Container

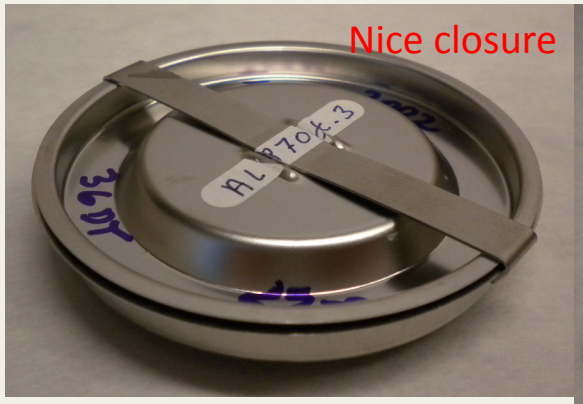

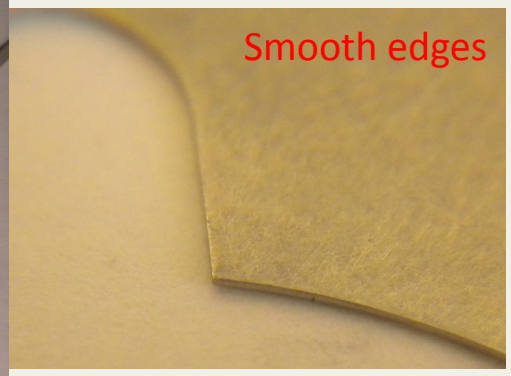

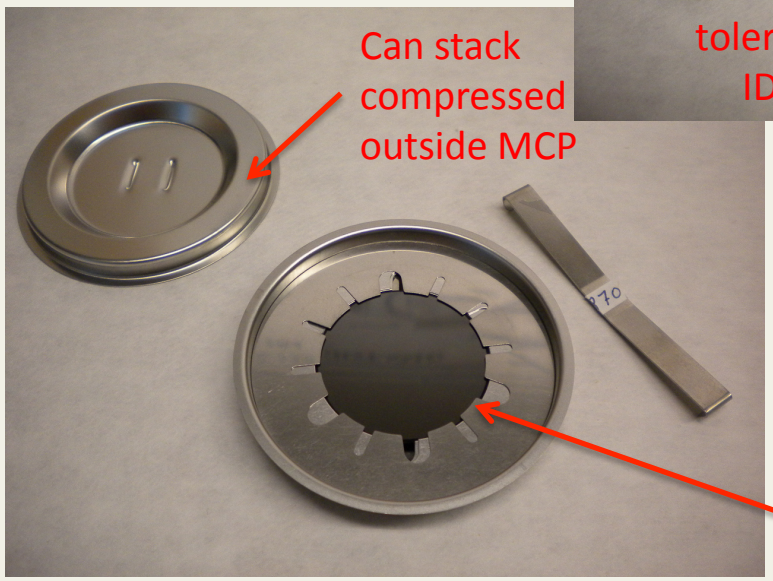

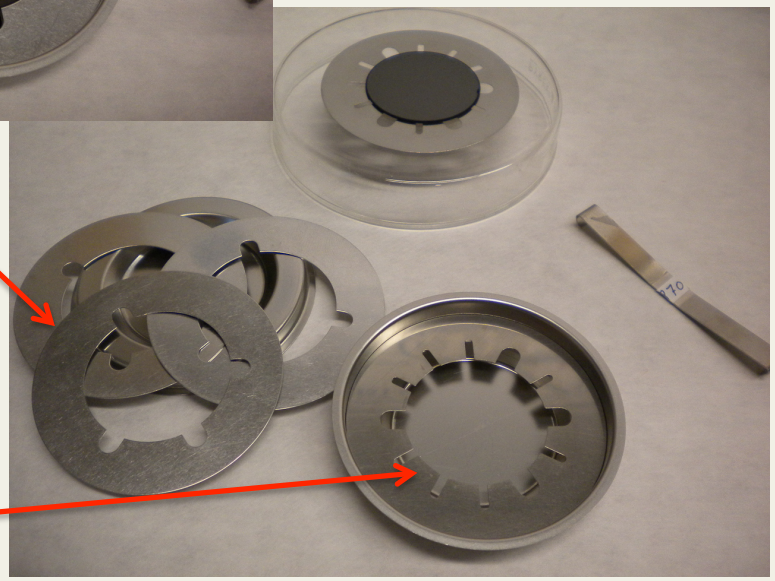

Design Example II
Hamamatsu Container

- Clever restraint of MCP by self-centering springs (rather than tight tolerance)
- But more difficult to get MCP in/out safely (tends to rock on bottom spring)

Large MCP Container

- Big MCPs will be almost impossible to keep dust free
  - Any packing that presses on the face will smash dust into the pores making it impossible to remove
  - These types of defects become background hot spots
- Will restraining this large MCP by the edge be enough? Or will the MCP diaphragm?
  - If not, add minimal extra contact area (and keep in non-active area, if possible)
- Big threat will be torsion of the containers
  - Make the container inherently stiff – thicker

Concept for 8” MCP Container

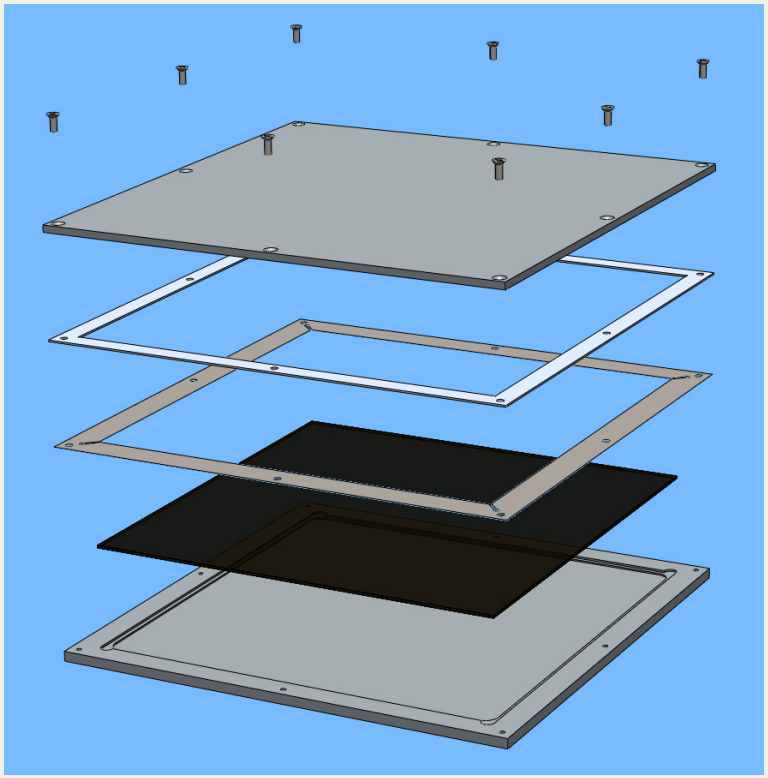

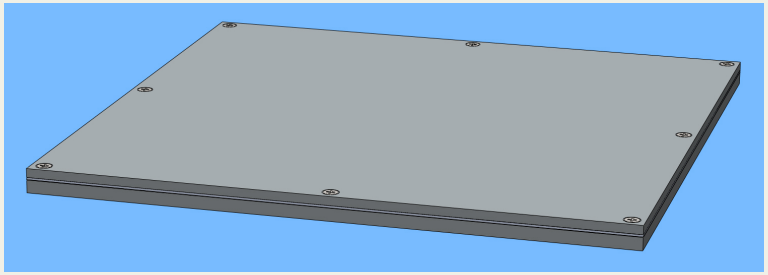

- Ni-plated aluminum top and bottom plates (top is a simple plate)
- .033” aluminum spacer/clamp ring
- .005” stainless retainer spring
- Bottom plate has CNC’ed two step pocket to support just the edge of the MCP (not as expensive as it sounds because it’s aluminum)

- Fastened together with M3 flat head screws
- Makes for a flat, stackable assembly

8” MCP Container Clamp Detail

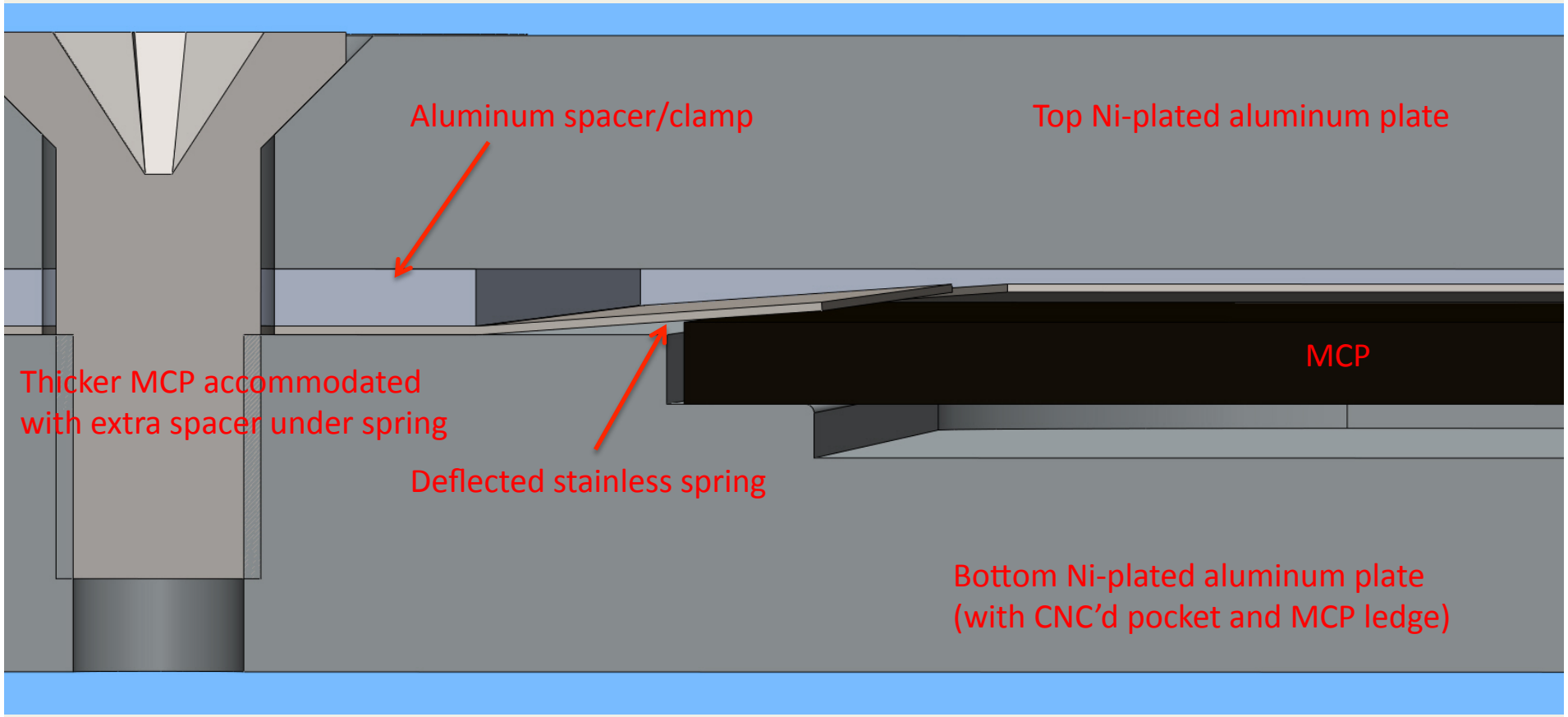

Diaphragm Snubber Concept

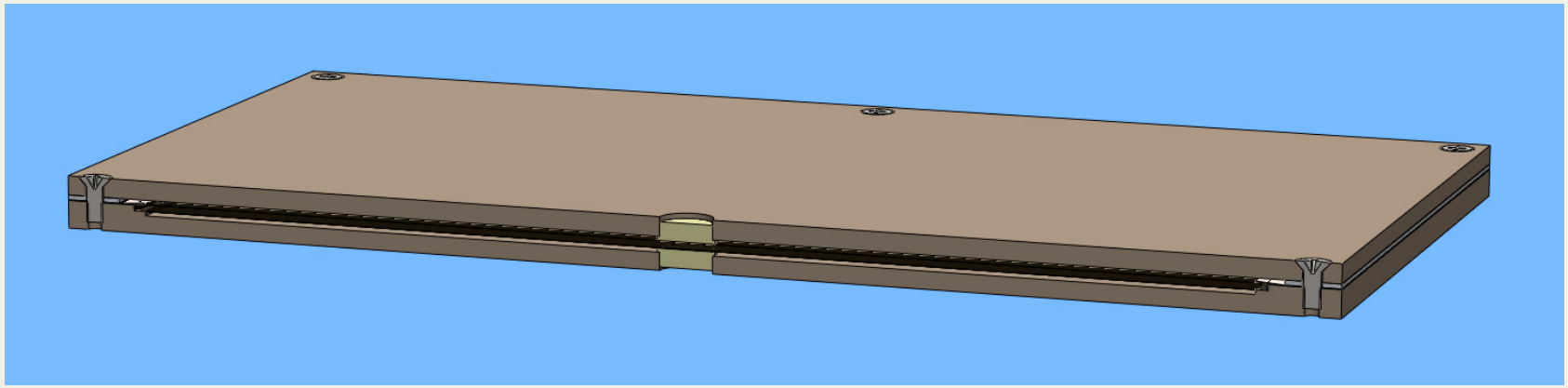

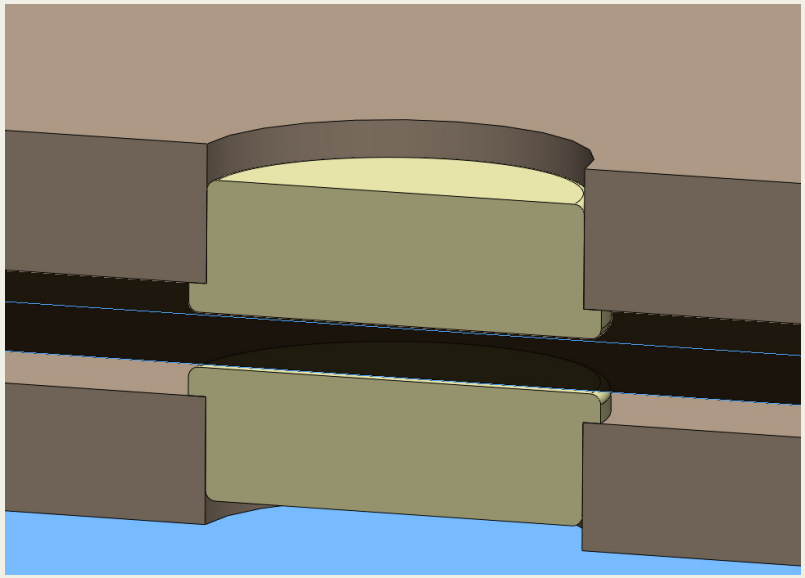

- Press fit mushrooms into holes in top and bottom plates
- Not nominally in contact with MCP (.003" clearance here) – just to minimize amplitude of diaphragm
- Shown as PEEK – Perhaps Ni-plated aluminum

- Easy to add post-facto to this design
- Located in the middle of our X-grid (non-active area)

MCP Lab Storage

- Requirements
  - Keep the MCP dry and clean
  - Provide protection against normal activities in the lab
  - Probably want a dedicated space to prevent accidents
- Most reliable storage is vacuum
  - Pump it down and valve it off
  - Best for dryness (H_2O absorption can crack delicate MCPs)
  - Access requires pump cycle
- Nitrogen dry box storage is easier
  - These plates seem rather robust, so may not require vacuum storage (the 8" is a bit of a worry still)
  - Easy access to the MCPs
  - Have to maintain the N_2 flow (we use LN_2 boil off)

Storage Containers

- MCPs need not be stored in the same containers they were shipped in
- Can be removed to a less robust container (freeing up the shipper for more use)
- Must maintain the cleanliness and ESD requirements
- Can relax the strength requirements – probably only needs to accommodate some stacking