xTCA Relative Activities at IHEP

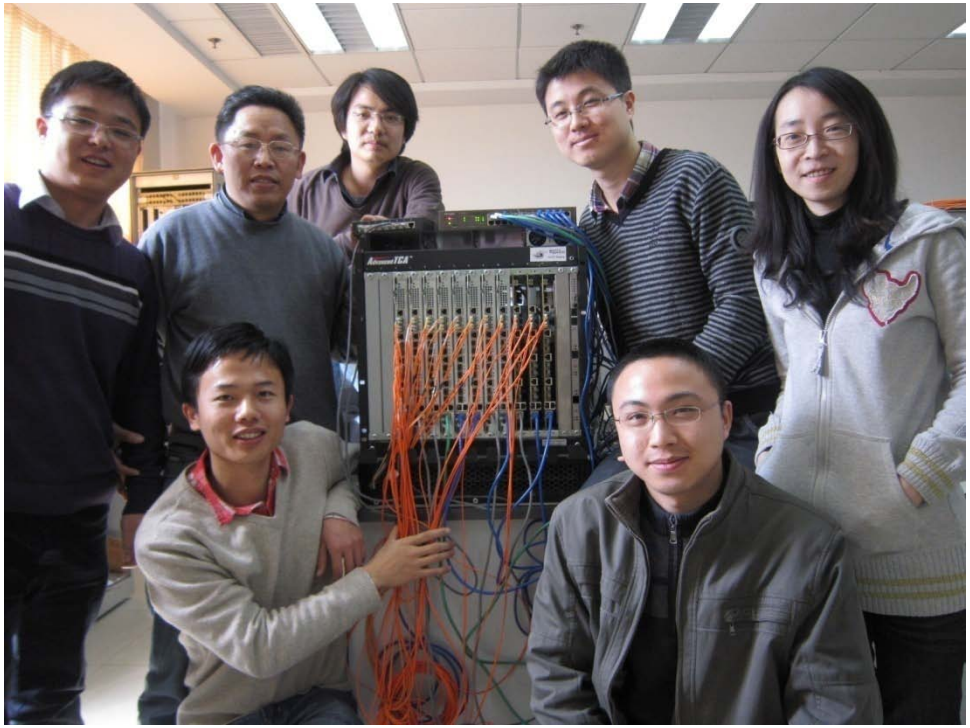

Zhen-An LIU

IHEP, Member & Officer PICMG xTCAforPhysics Committees

Outline

- Background
  - Why do we need xTCA
  - What is xTCA
  - When started xTCA
  - Who is working on xTCA
  - Where we are with xTCA
- Activities at IHEP
  - Experiment Oriented Design
    - Digitization
    - Data processing
    - Data buffering
    - IPMC
  - Machine control Oriented Design
    - LLRF for Future Machine
  - Applications
    - Panda DAQ
    - Belle II/PXD DAQ
    - Belle II/SVD
    - BES III Luminosity upgrade
    - TREND upgrade

Why-1： Brief history of nuclear Instrumentation standards

- 1960’s
  - Nuclear Electronics standard by Rutherford Lab England
  - CERN and American Labs
  - NIM: First standard
- 1970-80’s
  - CAMAC (still in use in some labs)
  - FASTBUS (no more in usage)

    widely used in particle and numclear physics experiments
- ***1990’s***
  - ***Adopted VME（VXI），industrial***
- ***2000’s***
  - ***CPCI also Industrial***

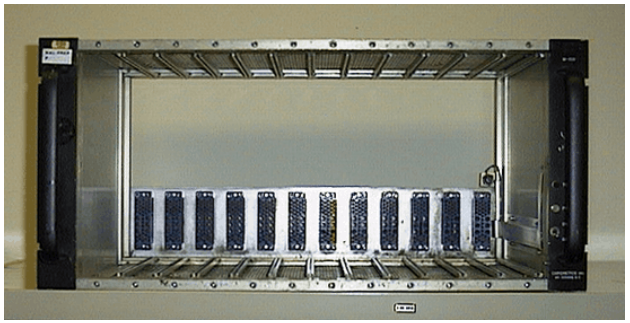

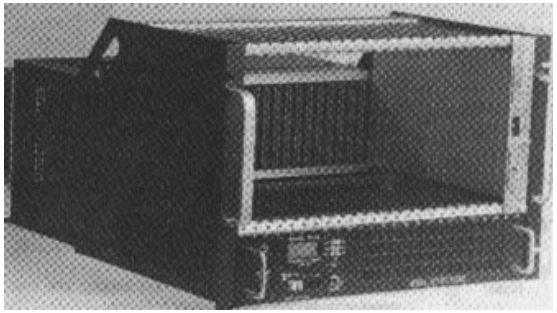

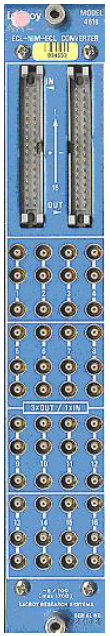

Why-2:VME/CPCI is not sufficient

- Life time for a standard
- New standard for demand
- BESIII development
  - 200Gbps is needed
  - VME 6U/9U is used
  - Bandwidth is not enough
    - 500Mbps on backplane
- Solution
  - RocketIO
  - Optical Fiber
  - Private backplane
- NEW STARTNDARD is needed

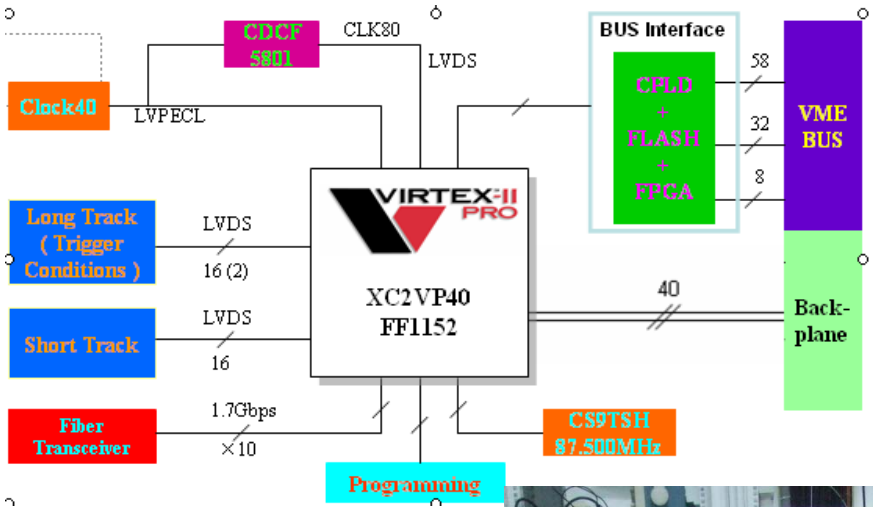

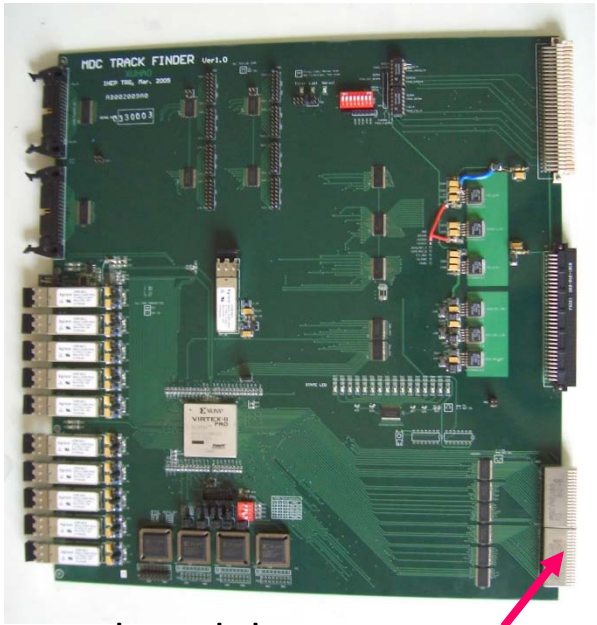

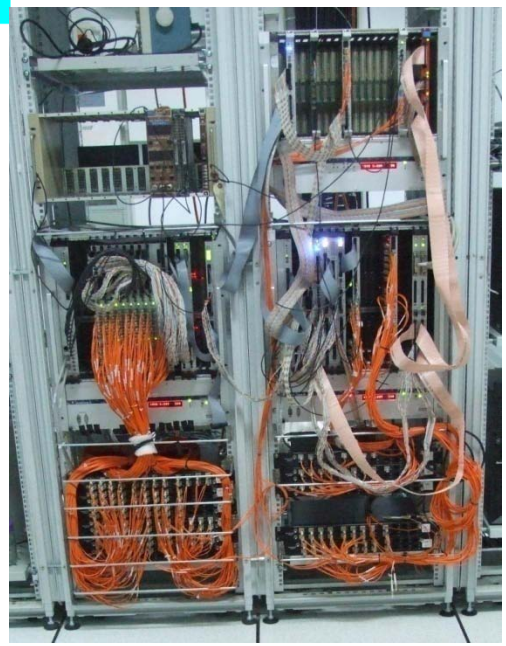

BESIII general module

Private backplane

205Gbps synchonized

Why-3 : PANDA DAQ

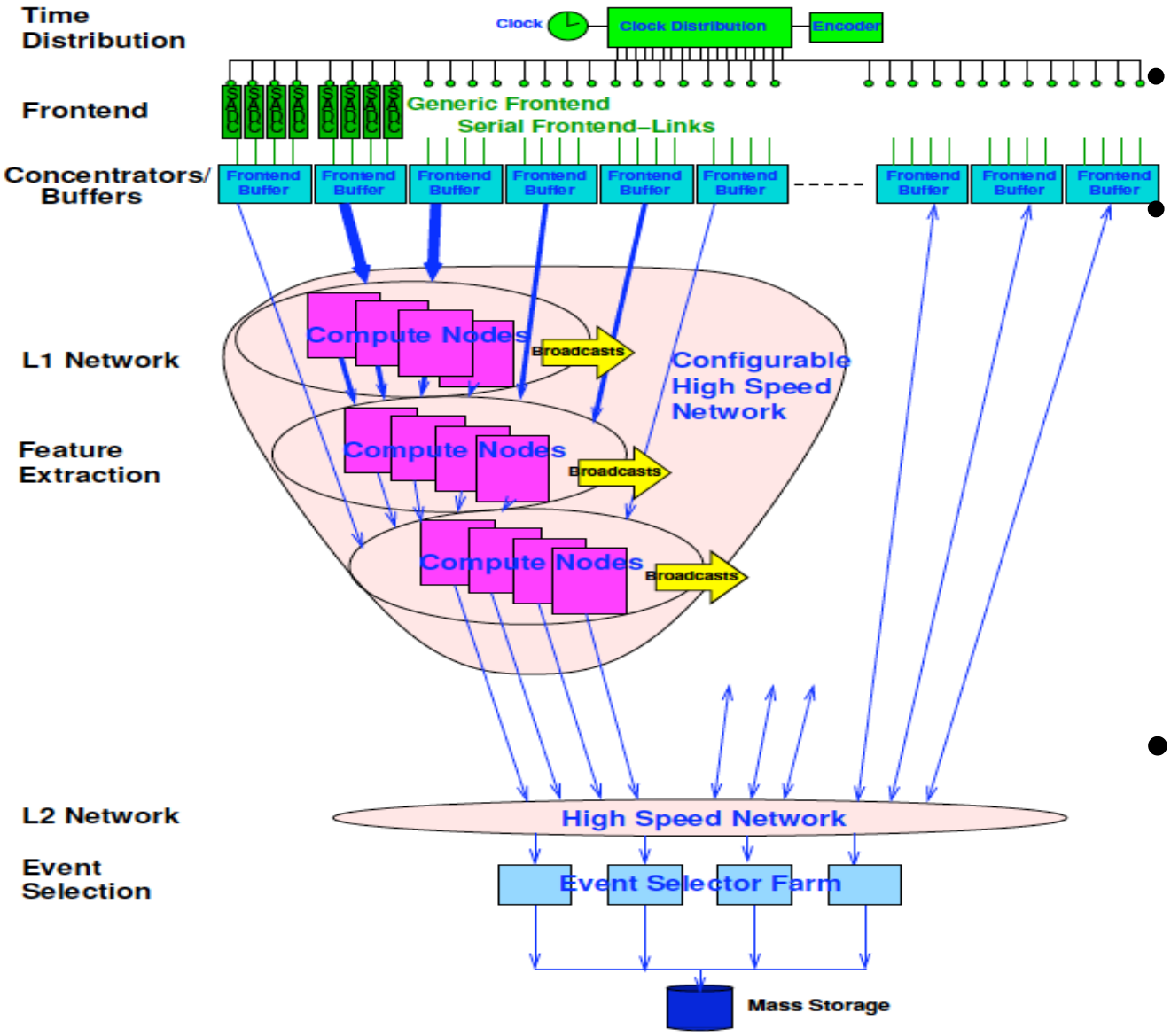

- Hardware-trigger-less system
- HLT on Compute Node (CN)
  - High speed IO
  - HS interconnectivity (3Gbps)
  - Large Data memory
- Large bandwidth for interconnection

What-1: Totally new standard?

- New standard:
  - Totally new?
  - Adoption from Industry?
- TeleCommunication Industry
  - CPCI ~600 Mbps
  - VME 64x ~300Mbps
  - Limmitation in bandwith,
- PICMG Consortium
  - >105 companies
  - ATCA committee for new
  - PICMG3.0 ATCA in 2002
  - MicroTCA in 2006

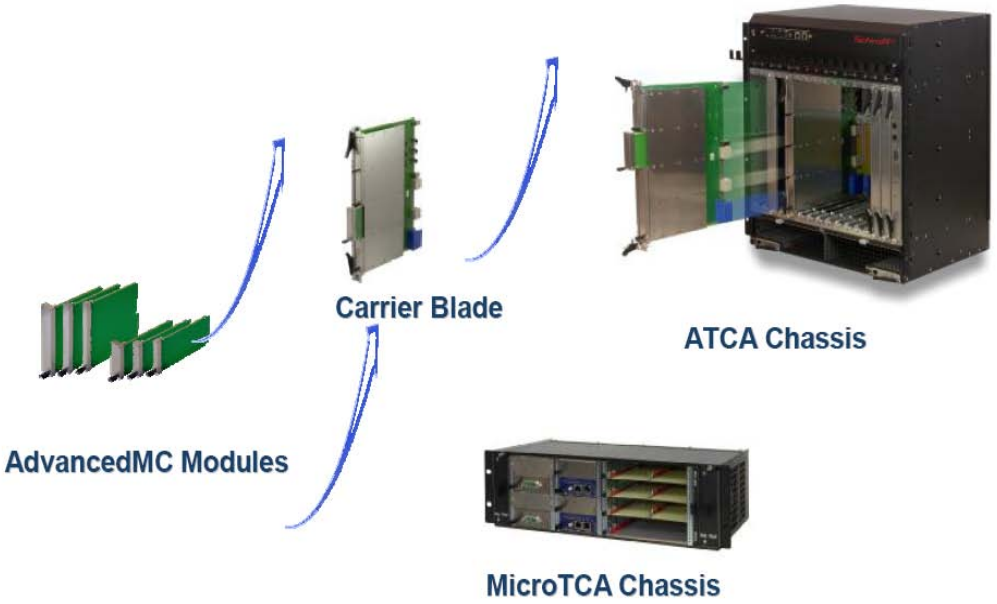

What-2: Adopted one?

- ATCA
  - Advantages
    - High Speed IO and
    - Interconnections 10Gb/s
    - HA ~99.999%
    - Intelligent Management
- MicroTCA (MTCA)
  - with adv. of ATCA
  - Smaller/flexible
- AdvancedMC（AMC）
  - Universal card

Adopt Industrial one like with VME?

For sure this is a good start.

What-3 Extention

- ATCA backwards：
  - 8U, to big for machine control
  - No rear transition module connection(RTM)
  - No difinition for AMC and signals
  - No RTM modules（HA）
  - No control signal lines…
- MTCA backwards：
  - No RTM connections
  - No RTM module（HA）
  - No control signal lines…
  - High precision timing?
- AMC backwards：
  - interconnection？
  - No Control signal
  - …
- ATCA+MTCA+AMC+Extentions

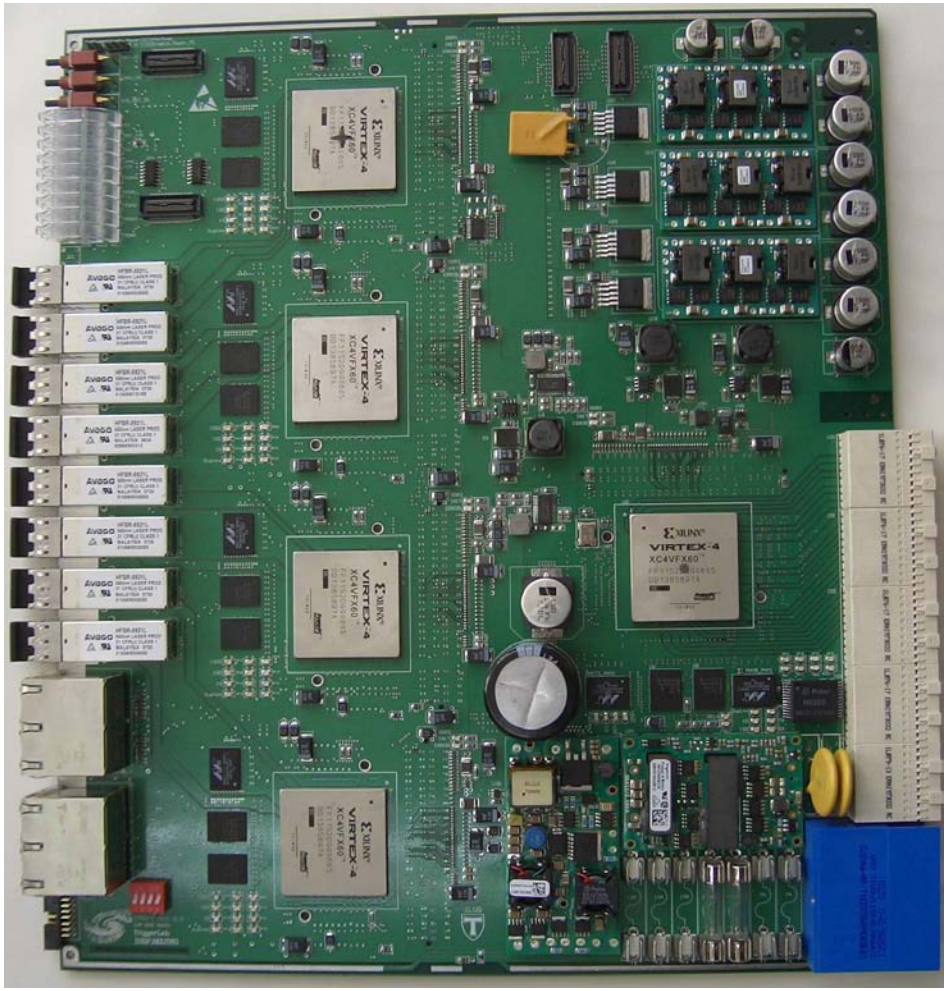

Compute Node by IHEP Beijing

制定新标准：xTCA for Physics

What-4: Working groups for xTCA for Physics

- **Physics Requests：**
  - **Physics User Survey Task Group**
- **Hardware Working Group WG1：**
  - **Physics xTCA I/O, Timing and Synchronization Working Group**
- **Software working Group WG2 ：**
  - **Physics xTCA Software Architectures & Protocols Working Group**

What-5: Tasks for WG1

- Hardware specification
  1. ATCA Rear Transition Module Interface for IO
  2. ATCA Carrier Boards for AMC's w/ Rear IO (2)
  3. AMC (Advanced Mezzanine Cards) w/Rear IO (2)
  4. MTCA (MicroTCA) Chassis w/ Rear IO (2)
  5. ATCA/MTCA Clock & Trigger Distribution (2)
- Priority One
  - Finish MTCA.4 and then PICMG 3.8
- Next Project
  - Precision timing using an ATCA backplane
  - PICMG 3.x specification or an application document on using ATCA backplane for precision clocking
  - Could look somewhat like a PICMG fabric interface document

What-6: Extentions,RTM

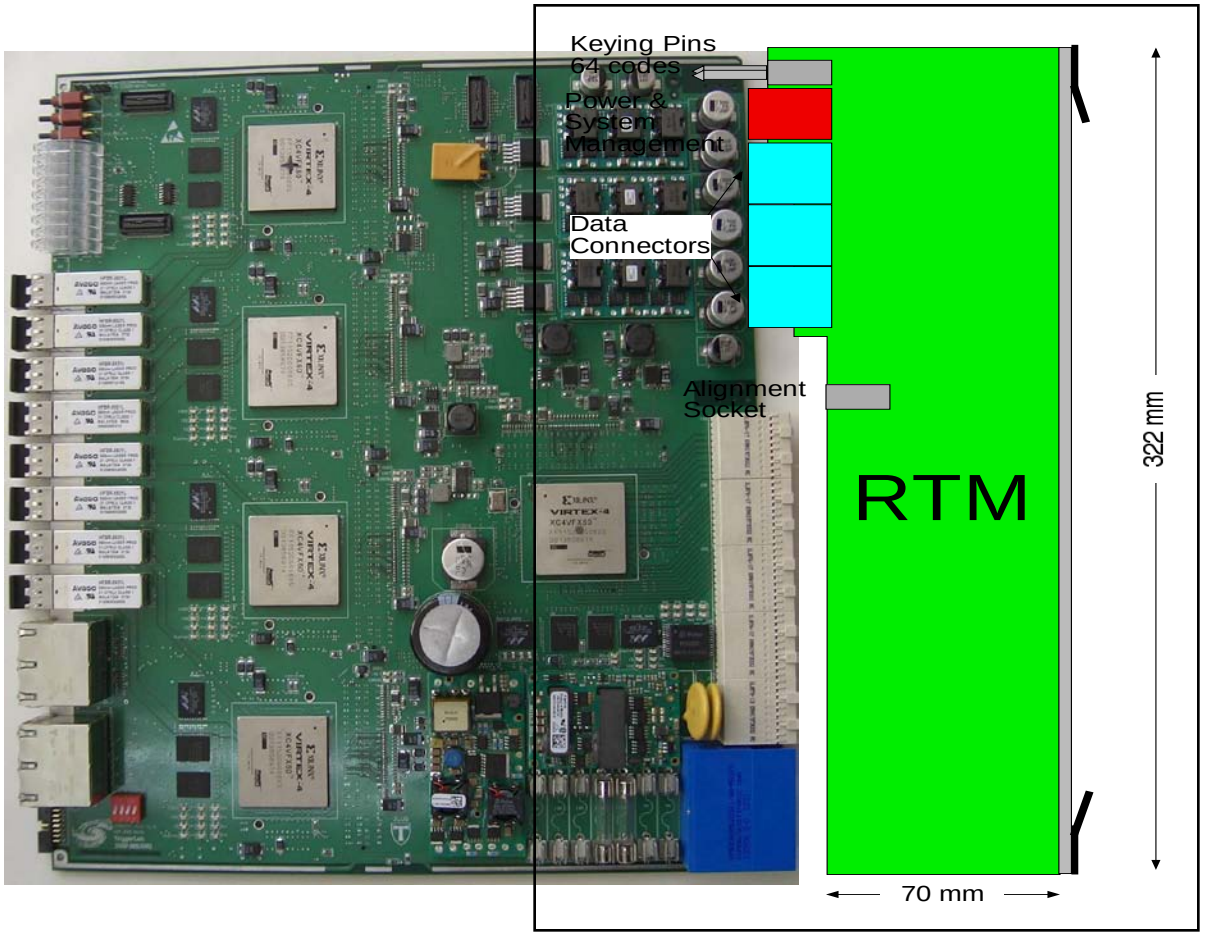

Extentions:Carrier board

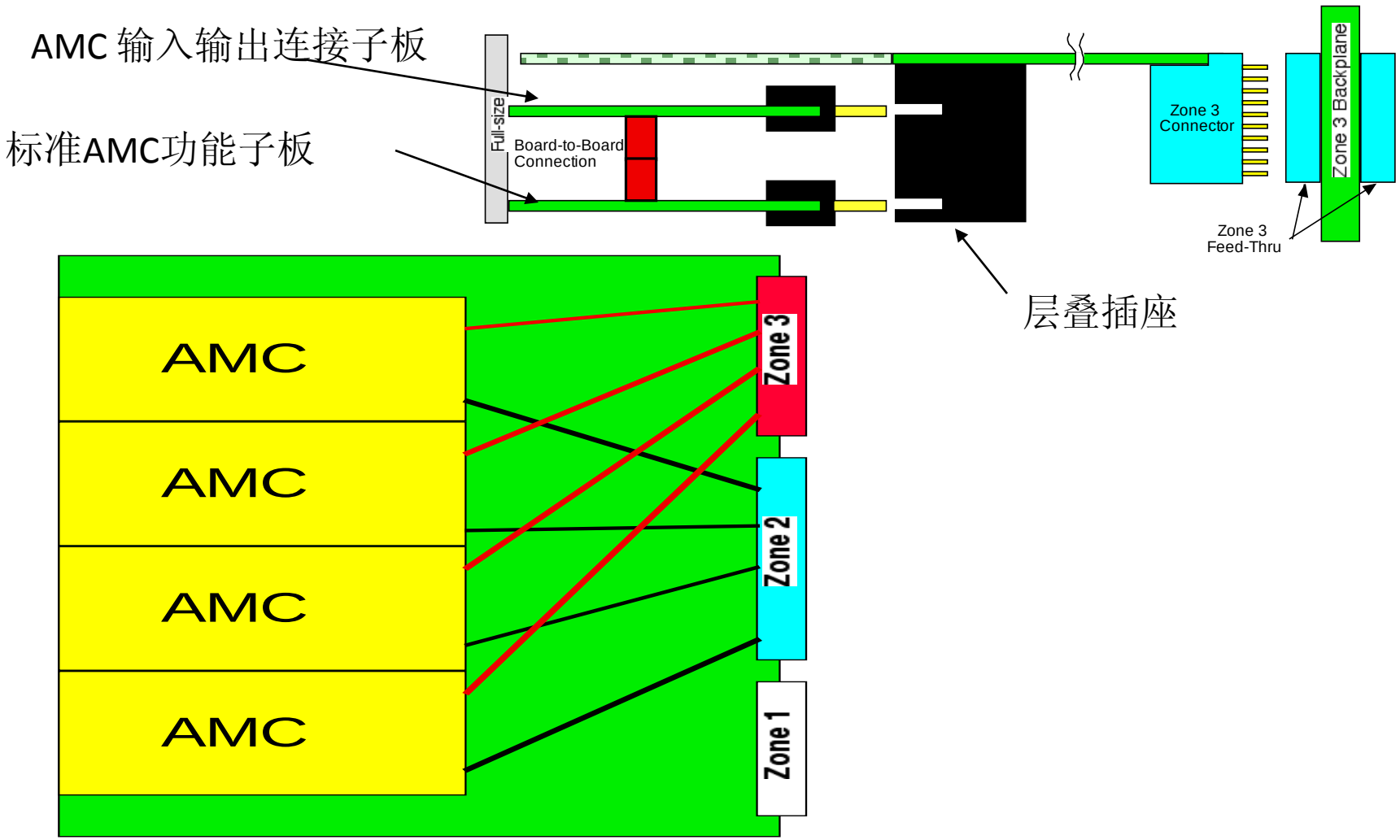

Courtesy R. Downing, SLAC

Extentions:Carrier baord

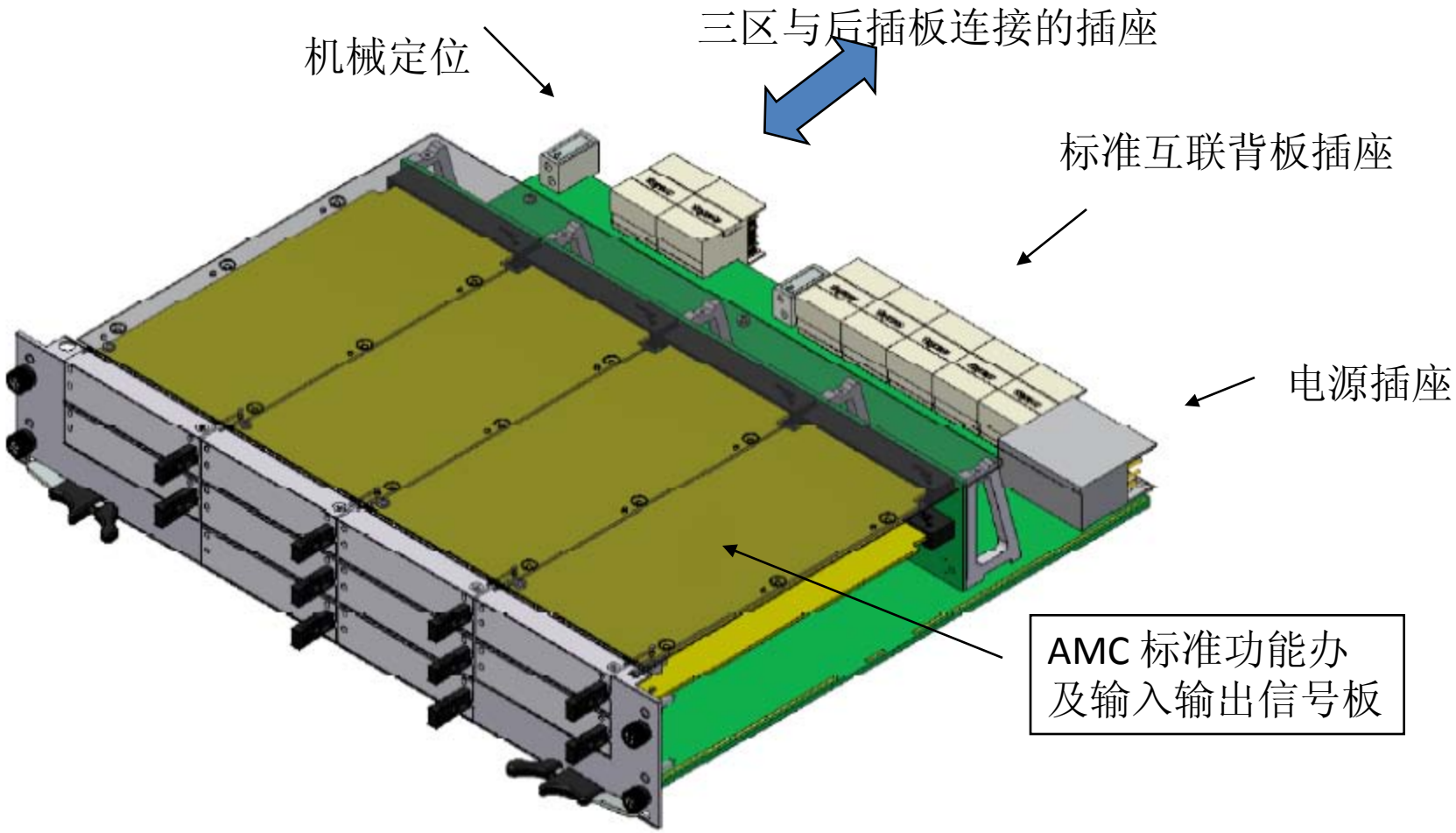

Extentions: Stacked 1-wide AMC w/ IO

(From DESY LLRF Design)

•层叠 AMC 板

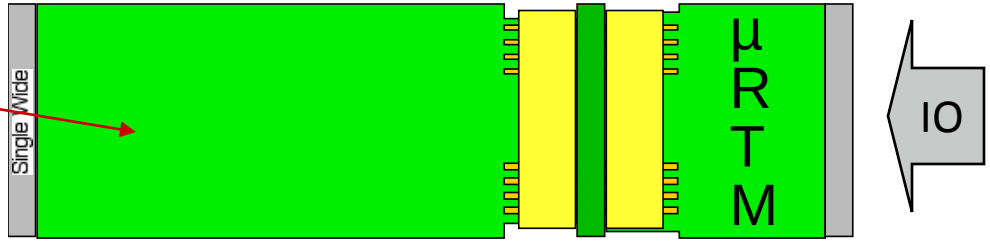

μRTM 后插板

•层叠板及插座
•与第二块板的接插座
•模拟信号接地,
•屏蔽, 串扰隔离

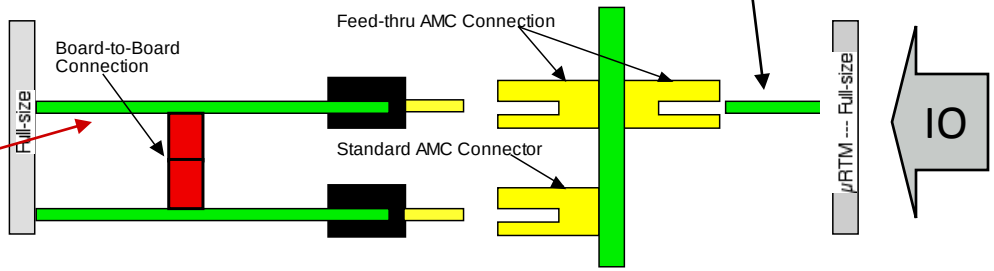

Dwg. Courtesy R. Downing, SLAC

Extentions:2-Wide AMC w/IO

(Design for Carrier or MTCA w/ Rear IO)

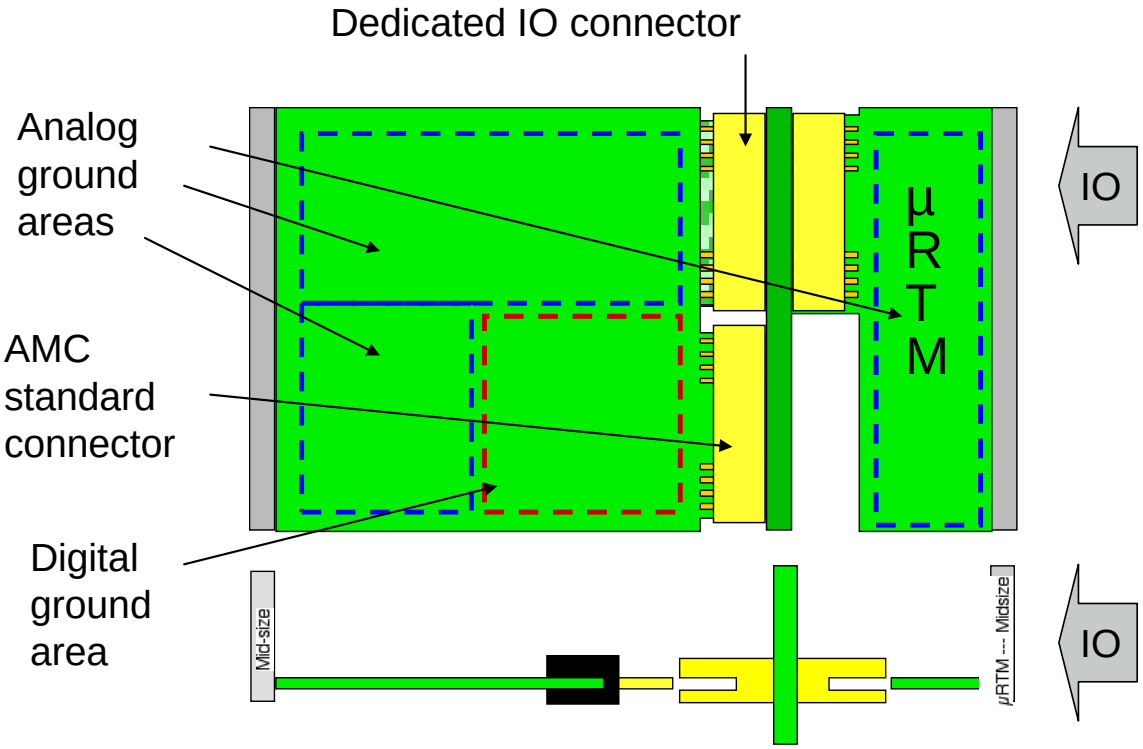

What-6: Tasks for WG2

- **Routing and Protocols**
  - Data Protocols
  - Timing/Synchronization Protocols
  - Command/Control
- **System/Shelf/Module Management**
  - Remote management functions
  - Shelf/Module management utilizes standard IPMI/HPI protocols and channels from ATCA/µTCA and SAF
  - System Management (under consideration)
- **Operating Systems and Infrastructrure**
  - Virtual Machine" environment for software development
    - Goal: operating-system independence at the application level
    - Goal: insulation from hardware details at the application level
    - Standardized components
- **Processing and Operations Libraries**
  - Commonly-used components
  - Reference Designs/Templates (software and FPGA)

When-1: xTCA for Physics

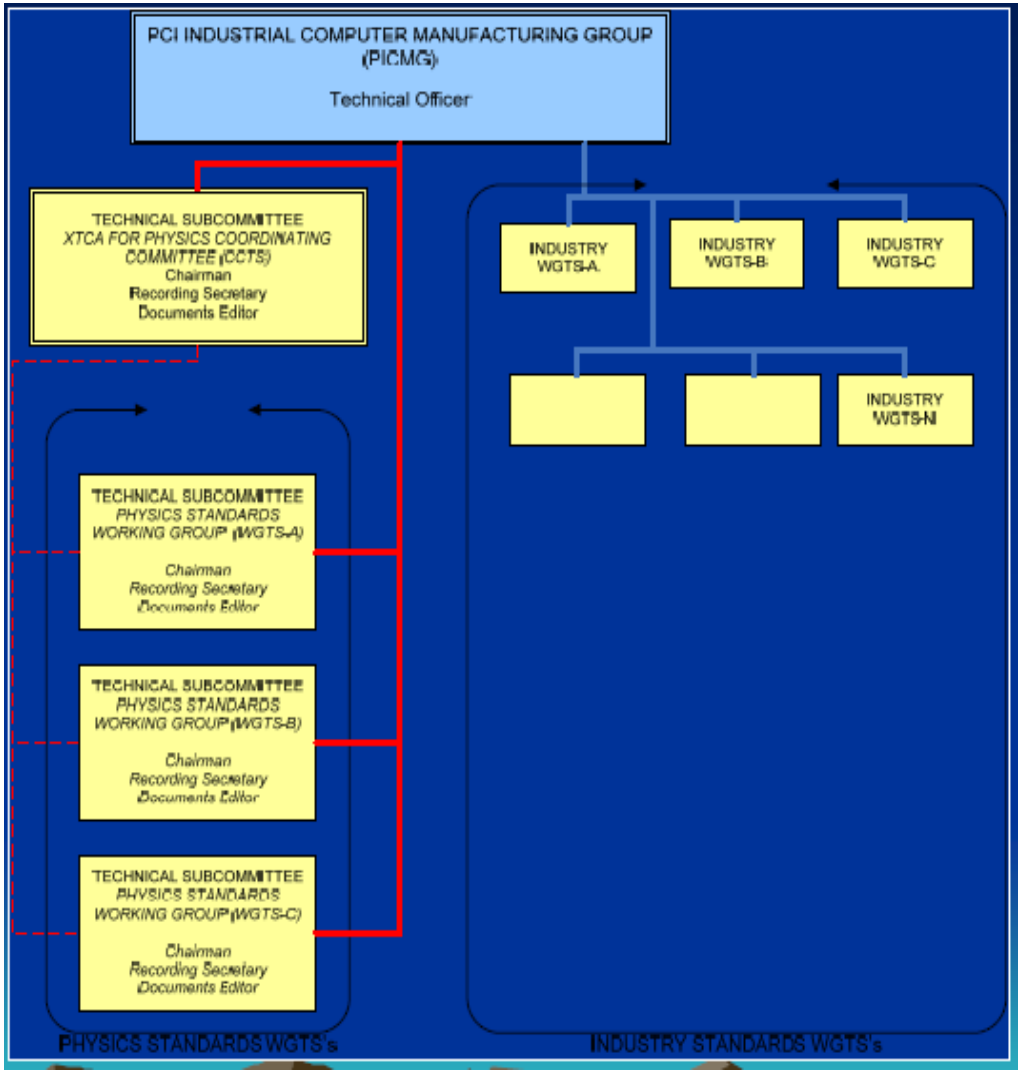

Coordination Committee (CCTS) founded March 10 2009 under PICMG

- Founding Institute: IHEP,SLAC,FNAL,DESY
- Founding Companies: >40
- Offices elected:
  - Chair： Ray Larsen from SLAC
  - Secretory:Augustus Lowell from Tripple Circle
  - Document Editor:Zhen-An LIU from IHEP Beijing
- CCTS monthly meeting
- WG weekly meeting

Who-1: Who are working on xTCA?

Who else is using ATCA?

The group of experimenters includes several major laboratories representing different fields of use and a range of applications.

- Active programs are showing up most notably at
  - DESY for XFEL and JET
- Other laboratories
  - ILC, IHEP, KEK, SLAC, FNAL, ANL, BNL, FAIR, ATLAS at CERN, AGATA, large telescopes, Ocean Observatories
- Investigating ATCA solutions for future upgrades
  - Both the CMS and ATLAS detectors
- Setting up prototype experiments to test its potential
  - ILC and ITER

ATCA is being adapted without significant change as a platform for generic data acquisition processors requiring high throughput and bandwidth.

Most of these programmes put the emphasis on **High Availability**

17

B. Gonçalves | Paris, February 2, 2009 | NI - Big Physics Round Table

Who-2: example in xTCA CCTS meeting

xTCA Coordinating Committee Meeting Agenda
October 28, 2010 0700-0800 Pacific Daylight – Live Meeting

1. Call to Order – Chair Ray Larsen
   a. PICMG Patent Call – Secretary Gus Lowell
   b. Roll Call, member changes since last meeting – Secretary
   c. Approval of Minutes of last meeting – Secretary
2. Review of Purpose & Scope of Coordinating Committee – Chair Ray Larsen
3. 3-slide reports from Technical Subcommittees
   a. Hardware WG (Timing, Synchronization & IO) – Chair Robert Downing
      SOW-Roadmap-Progress
   b. Software WG (Interoperability, high availability guidelines) – Chair Stefan Simrock
      SOW-Roadmap-Progress
4. 1-slide reports from Lab members
   a. DESY
   b. FNAL
   c. IHEP
   d. IPFN
   e. ITER
   f. CERN
   g. SLAC
5. 1-slide reports from Industry
   - Submit single slides in advance to larsen@slac.stanford.edu
6. 1-slide report from PICMG, MTCA Summit etc
7. New Business
8. Next Meeting Topic Suggestions
9. Motion to Adjourn

Where-1: xTCA for Physics events

- May 2007:1st ATCA workshop at FNAL
  + session in IEEE RT07
- Beginning 2008 discussion on feasibility of forming a new standard
- Oct. 2008: 2nd ATCA workshop in Dresden
  + session in IEEE NSS
- Mar. 10 2009: Founding of xTCA CCTS
- May 2009 : 3rd xTCA workshop in IHEP Beijing
  + session in IEEE RT09
- May 2010: 4th xTCA workshop in Lisbon Portugal
  + session in IEEE RT10
- Oct. 2011: 5th xTCA workshop in Valencia Spain
  + session in NSS/MIC xTCA
- June 2012: 6th xTCA Workshop to be hold Bekerley
  + Session in RT2012

Where-2:Progress/Status

- Two specifications publicized:
  1. 2-wide AMC, MTCA Chassis w/ µRTM (MTCA.4 Oct. 2011)
  2. ATCA RTM PICMG (PICMG 3.8 Oct. 2011)
- Under development
  - AMC Single wide 2-stack AMC's on ATCA Carrier
  - Timing and control
  - Software
- Hardware development
  - Prototypes

Ongoing XTCA related Development at IHEP

- Projects Oriented Design
- DAQ R&D for PANDA at GSI, Germany
  - Ver.2 of Computer Node (CN,ATCA) successful
  - Demo system established
  - Moving to XTCA(xTCA Carrier + AMC)
- PXD/DAQ design for Belle II at KEK, Japan
  - XTCA Carrier
  - AMC with FPGA+4G Memory+2 SFP
- SVD readout
  - AMC with FPGA+2G Memory+4 SFP
- Design for upgade of LUMI at IHEP, China
  - newdesign

PANDA DAQ

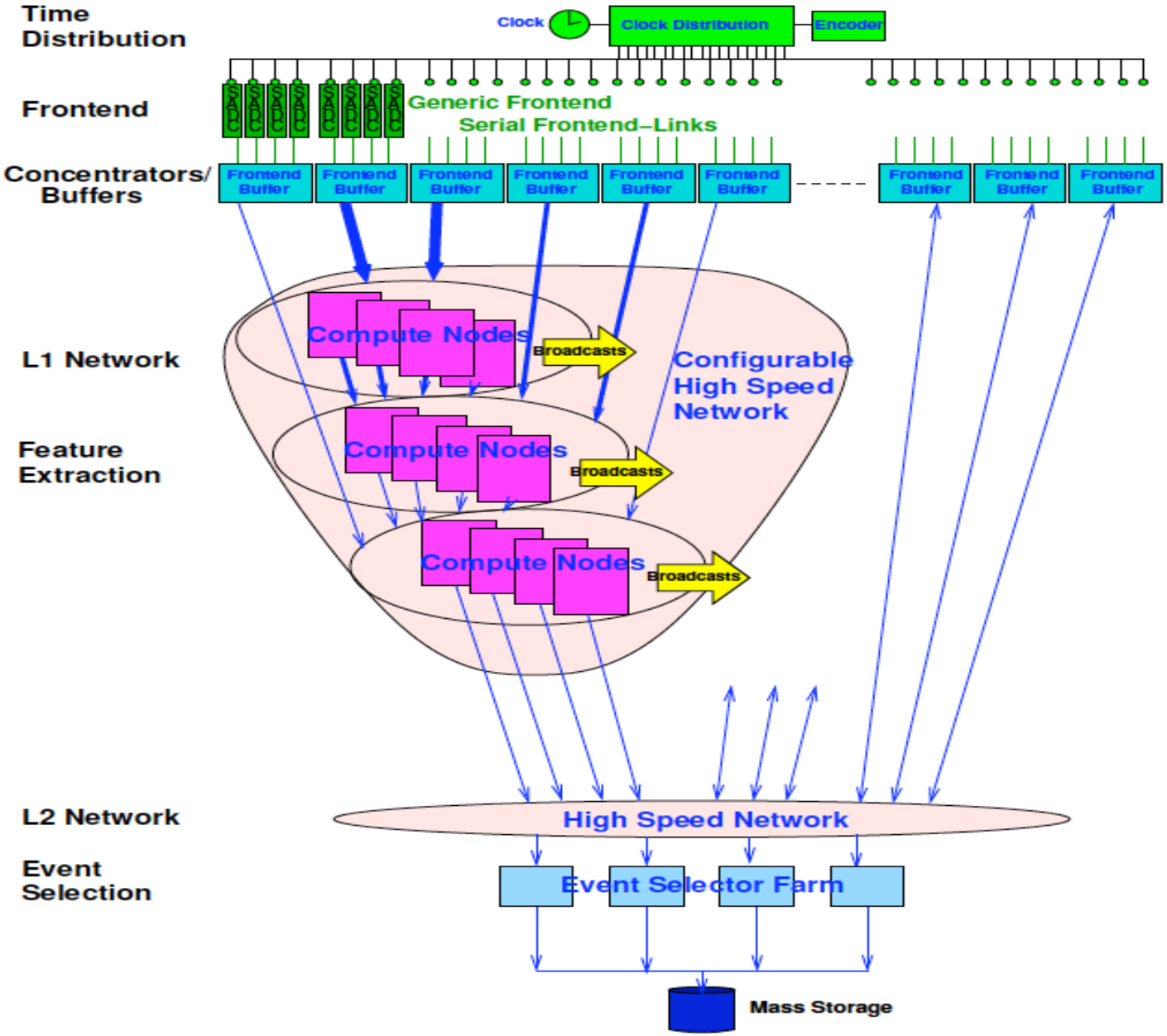

Compute Node(CN)

- High speed IO
- HS interconnectivity
- Large Data memory

Architecture and features of CN

- High Performance Compute Power/resources:
  - 5 Virtex-4 FX60 FPGA
  - 10Gb DDR2 RAM (2G/FPGA)
- ~32Gbps Bandwidth
  - 8x panel Optical Link(3Gbps each)
  - 13x RocketIO to backplane
  - 5x Gigabit Ethernet
  - 1x GBit Ethernet to backplane
- 2 Embedded PowerPC in each FPGA for slow control
  - Real time Linux
- ATCA compliant

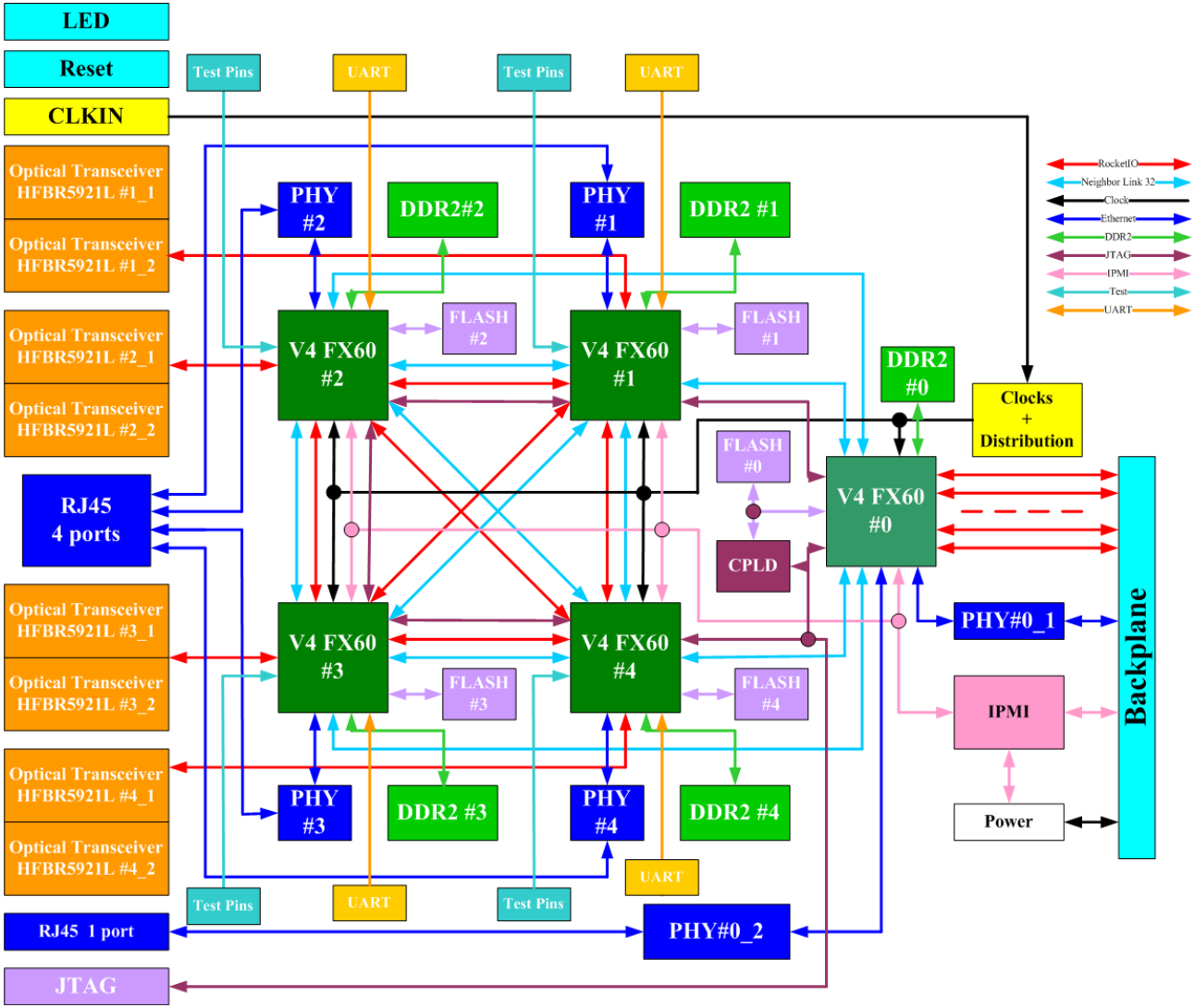

First Prototype

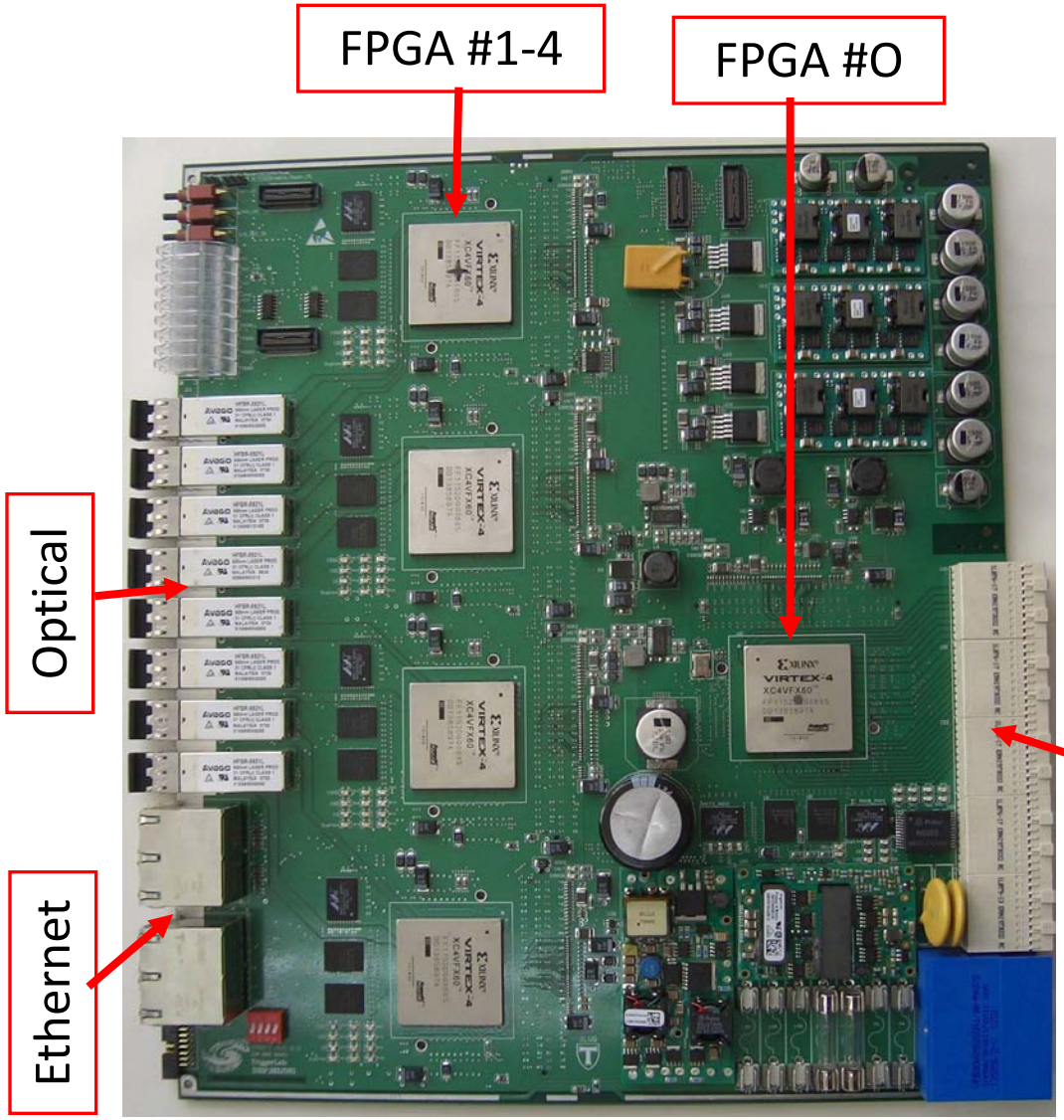

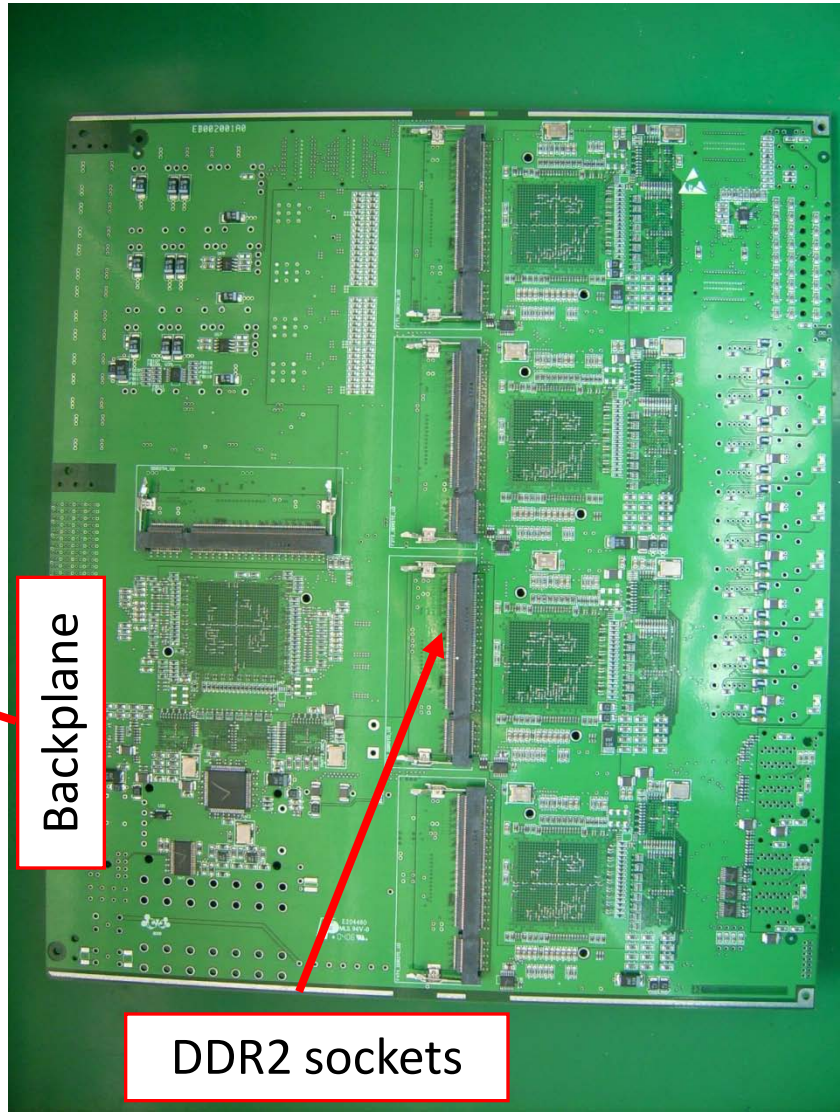

2nd version prototype

- SFP pluggable
- Mono RJ45 socket
- Higher bandwidth /SFP+
- Front Pannel
- Better LEDs

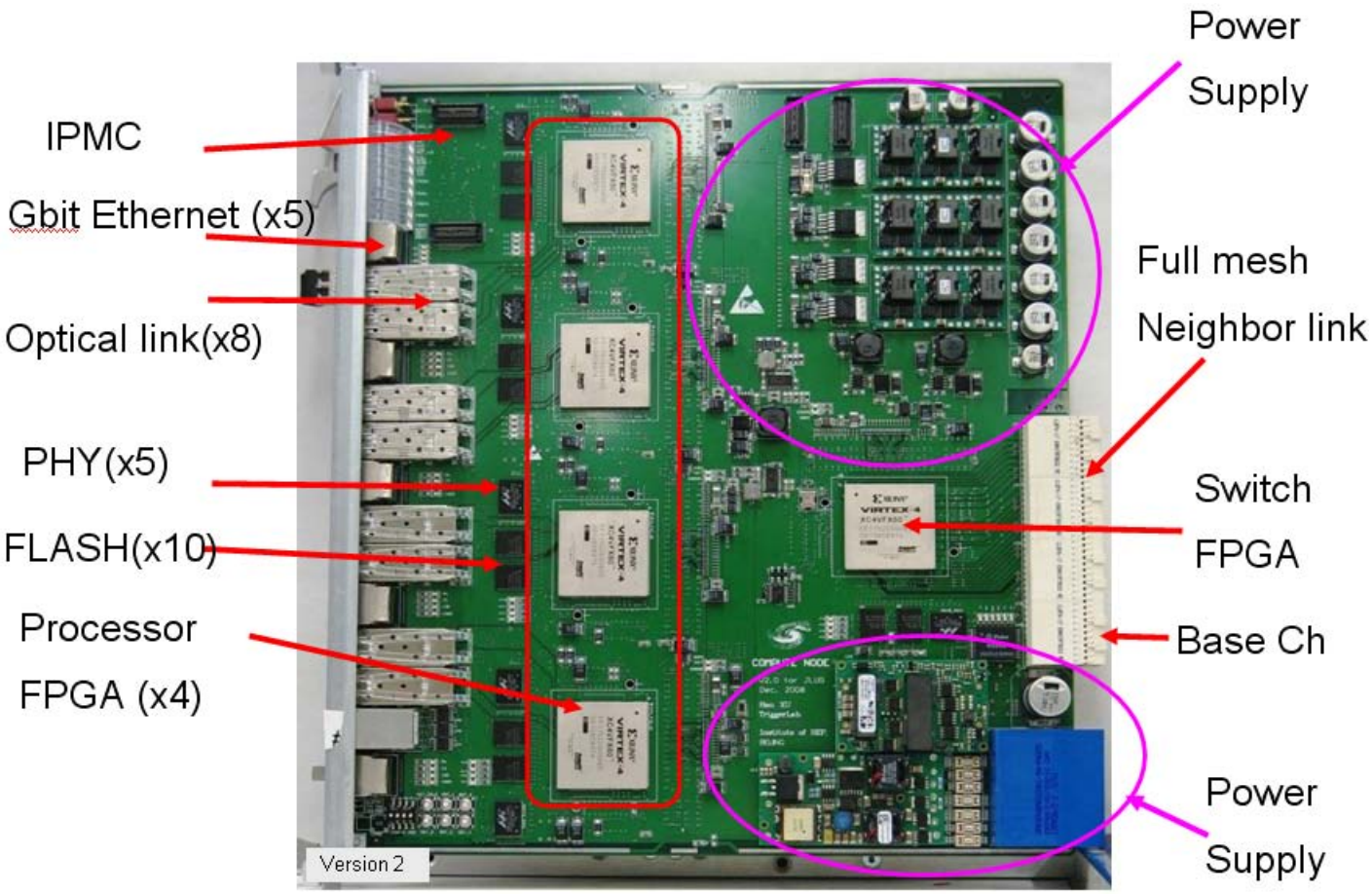

Status of PANDA CN/ATCA

- 15 CN have distributed in PANDA collaboration
- Satisfy the PANDA requirement
- But
  - no Rear connection
- Next:
  - Moving to xTCA
  - Timing

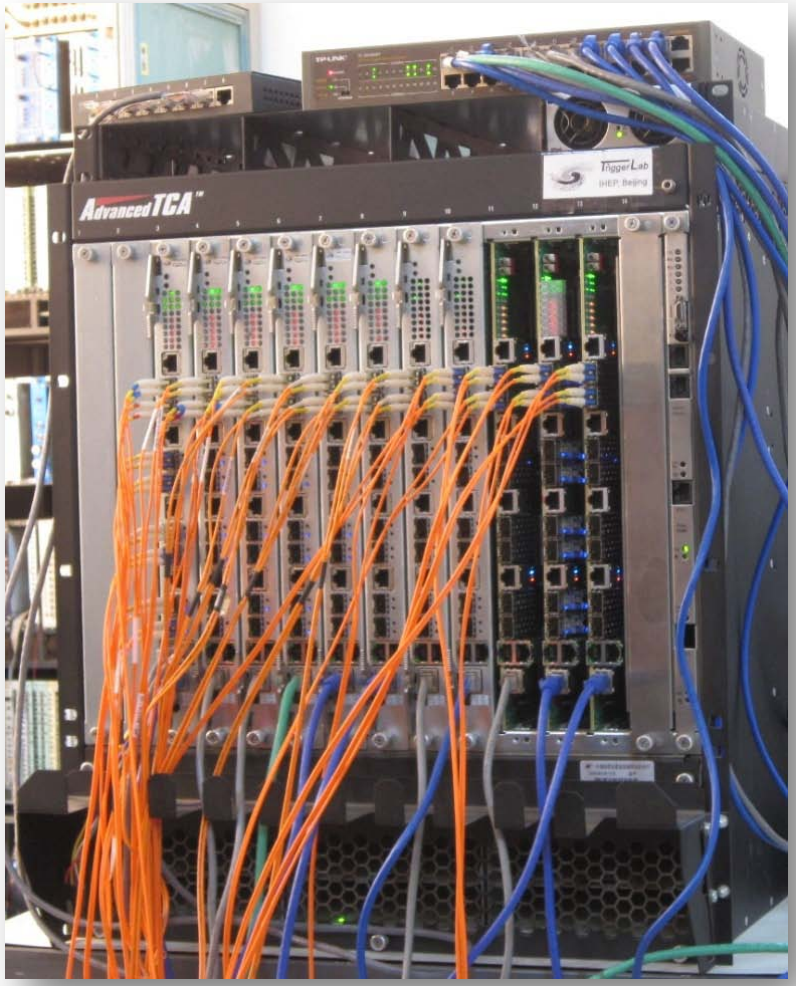

On going project 2:
PXD back-End readout for DEPFET, Germany

- Structure of PXD readout

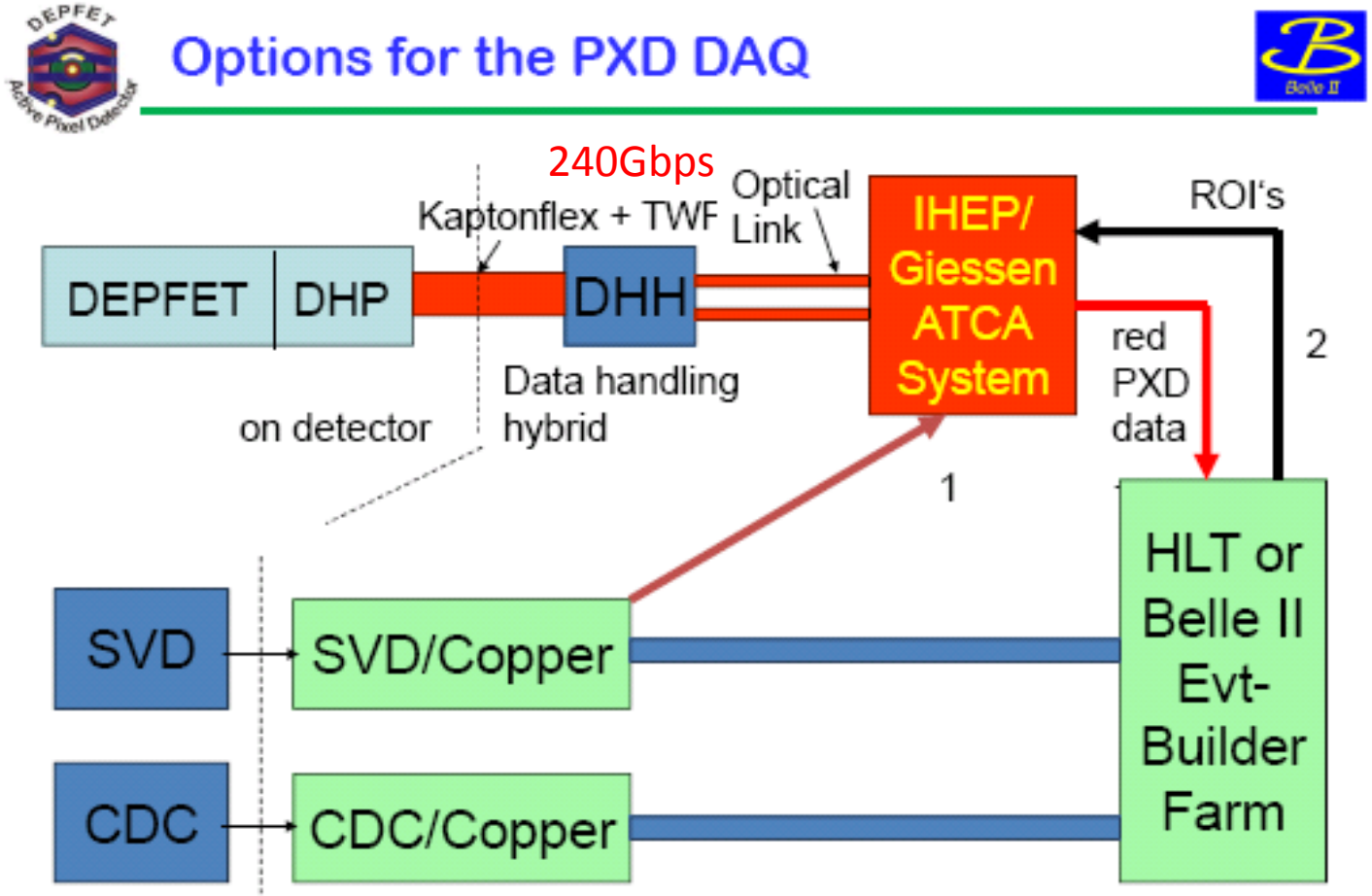

New version agreed in Gruenberg workshop 2010

- Which Platform ----------→Carrier/AMC
  - xTCA: ATCA Carrier + AMC
- 6.25Gbps/ch -→ 2x3Gbps
  - 6G/FPGA
  - 2 X 3Gbps/link
- DDR2 …… → 2X DDR2
- V4 or V5 or V6 or SP6? -------→ V5
- Memory 4G/FPGA(total of 20Gb)->4(20)G
- Clocks and controls ---- Yes

- Good chance for xTCA

Development of Carrier Board

- The mother board
  - based on xTCA
  - allowing backplane data transmission
  - 4 AMC connectors
  - FPGA0 for switch
  - IPMC routing
  - Clock/trigger/ distributions
  - Power conversions
  - RTM reservation

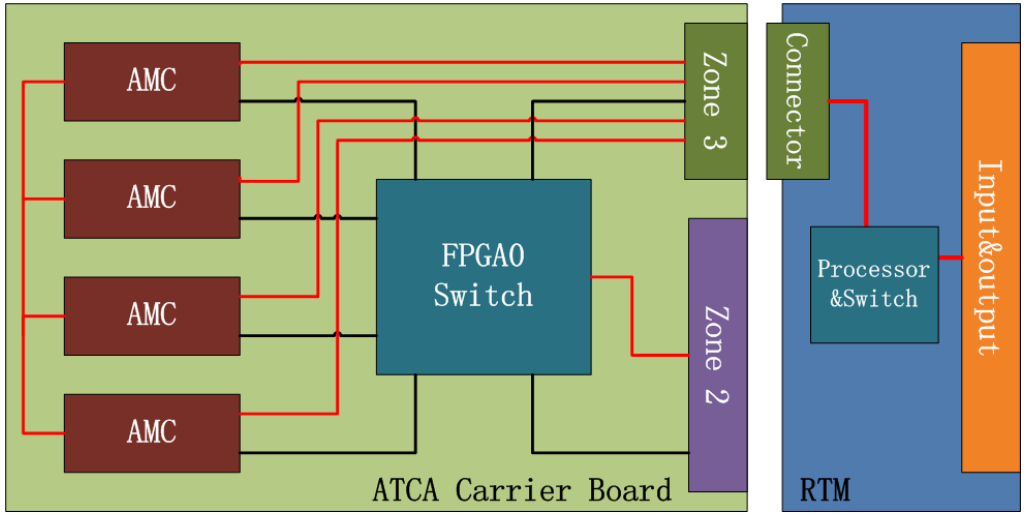

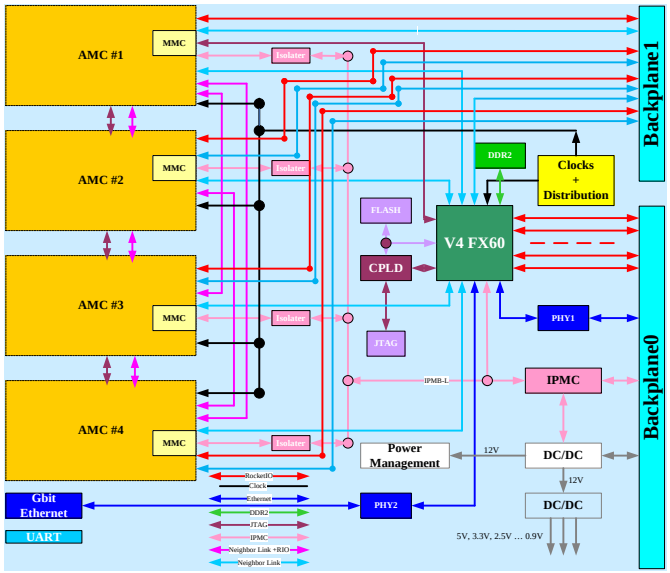

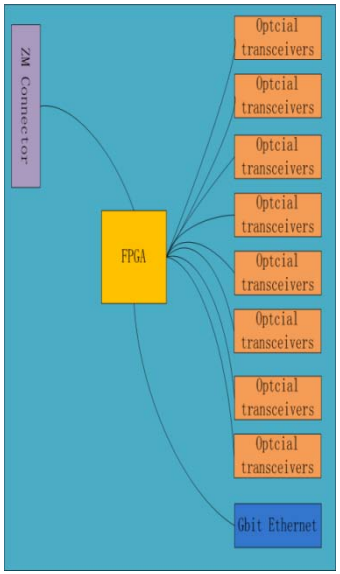

Status of HW development

- Carrier Board almost finished
  - Rear IO option
- AMC board: 2versions done
- 4 ports vers. under developm. For Bonn Uni.
- More under way

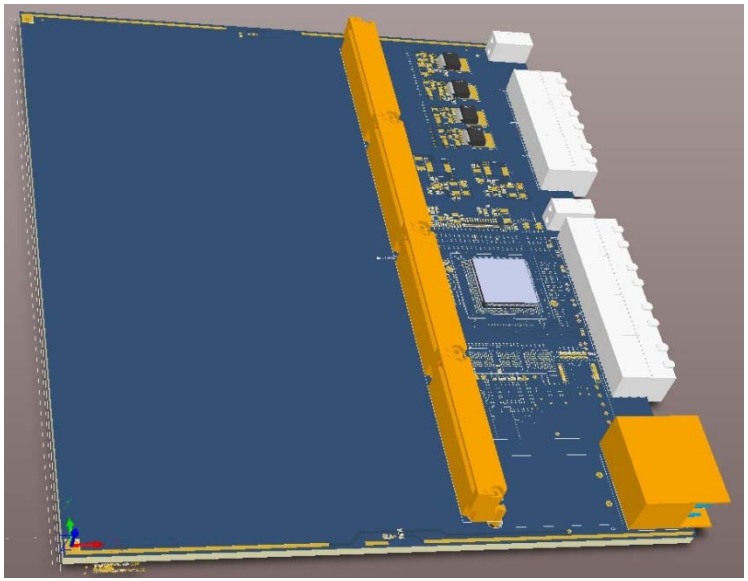

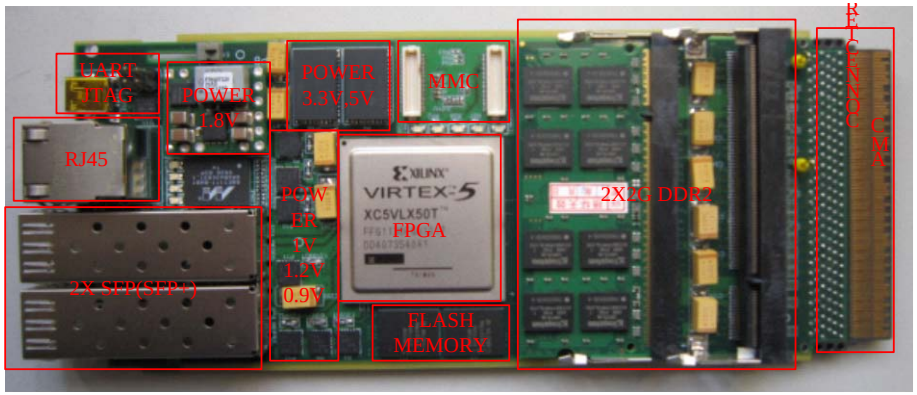

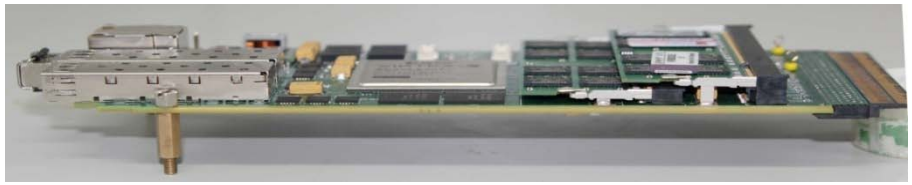

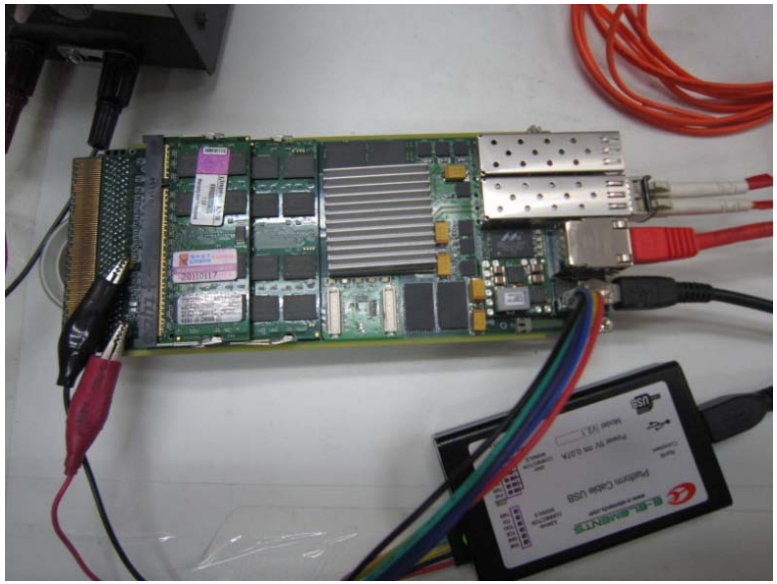

Ongoing XTCA Development at IHEP

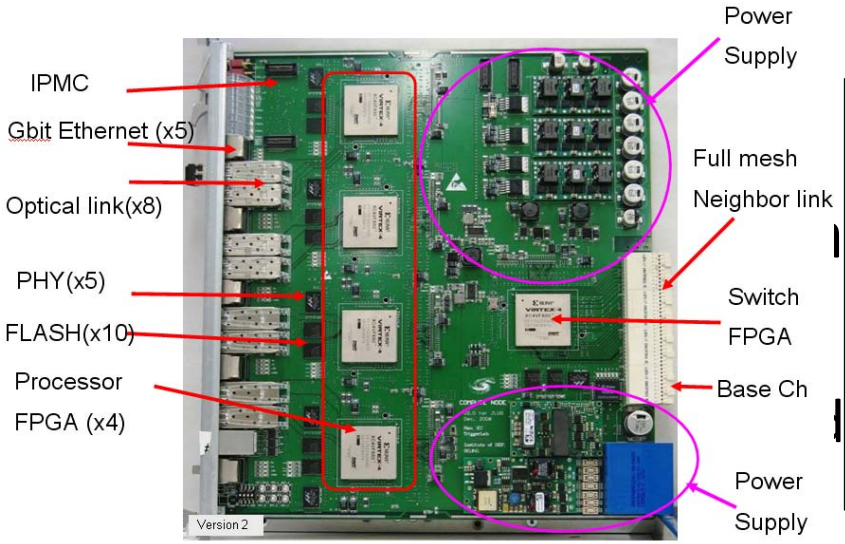

Ver2. ATCA CN

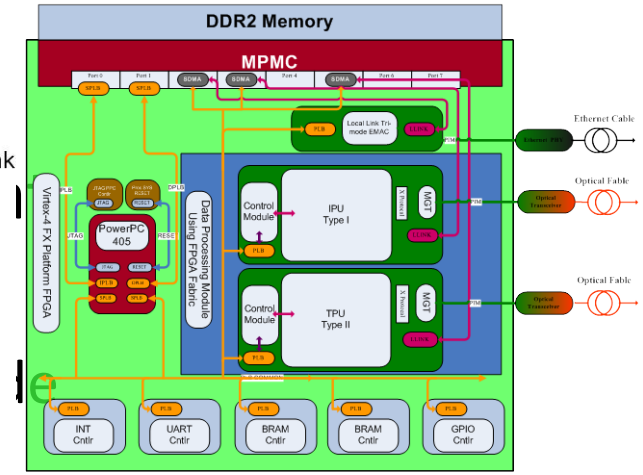

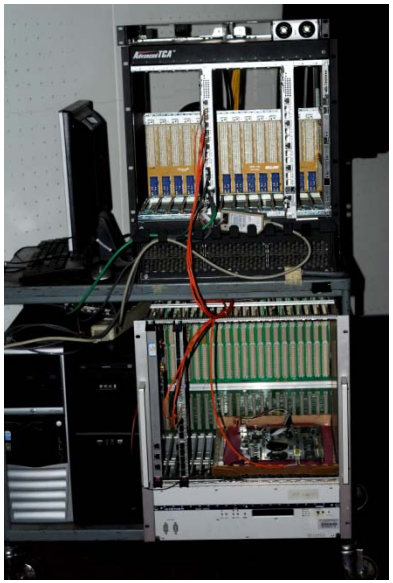

Demo system

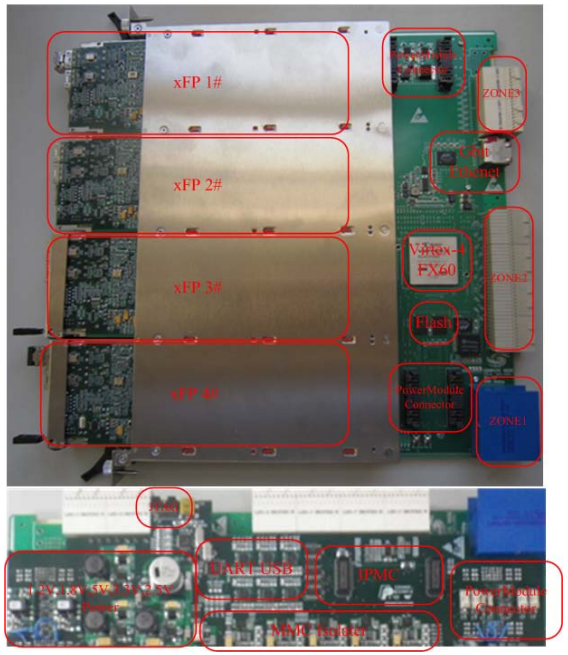

XTCA Carrier with AMC

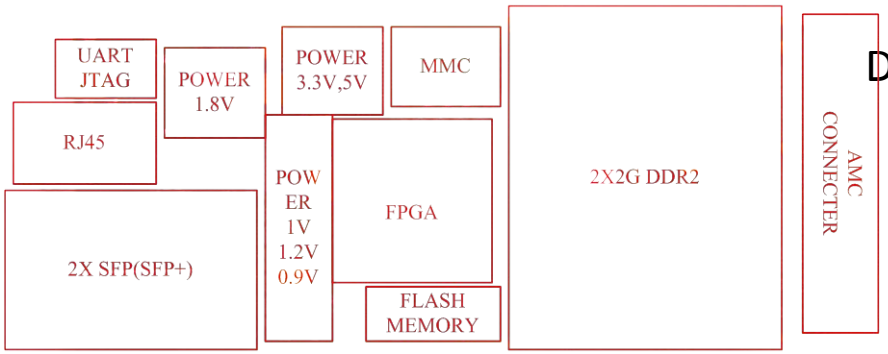

AMC

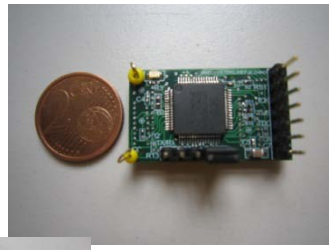

IPMCs

BESIII Luminosity Monitor System Upgrade

Old luminosity system

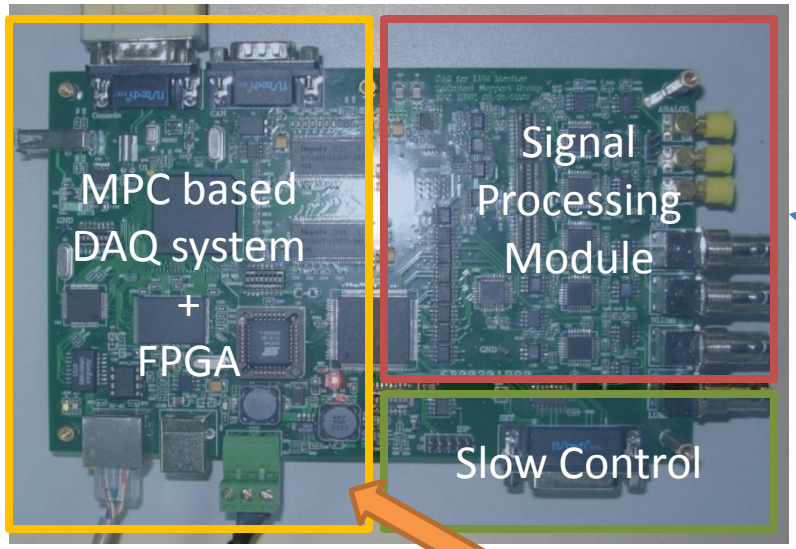

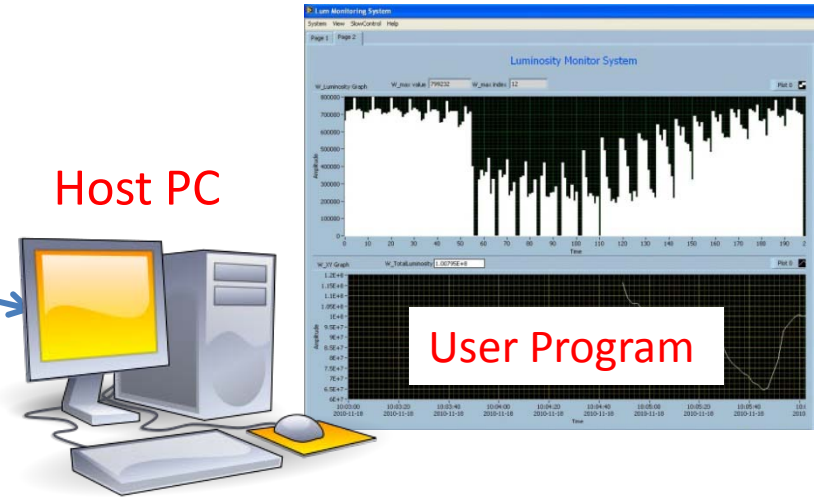

New Luminosity System

2-8 signals

AMC system

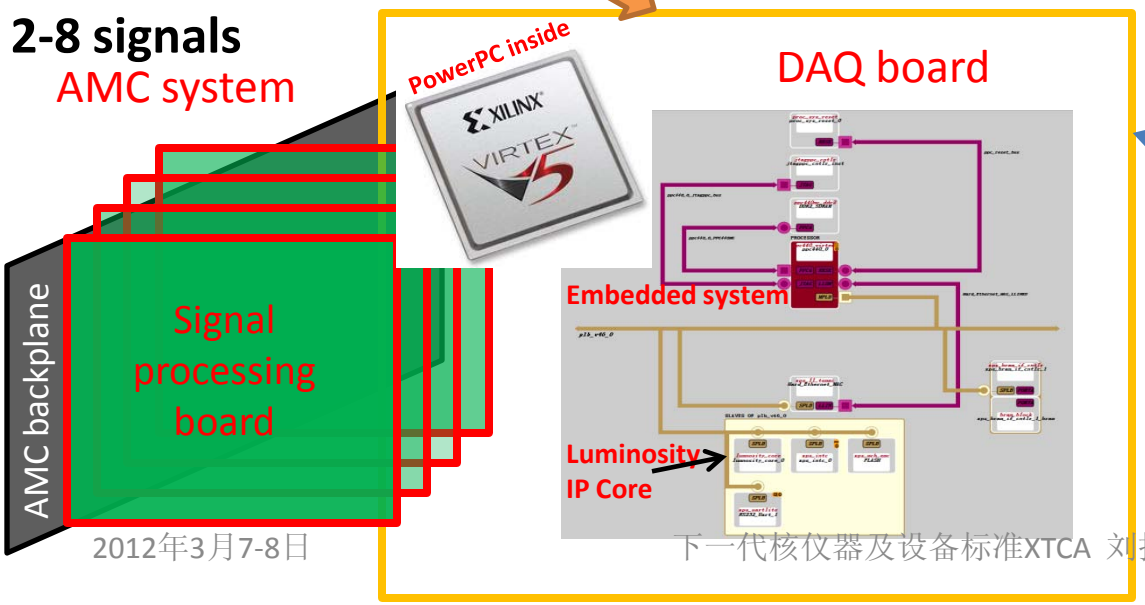

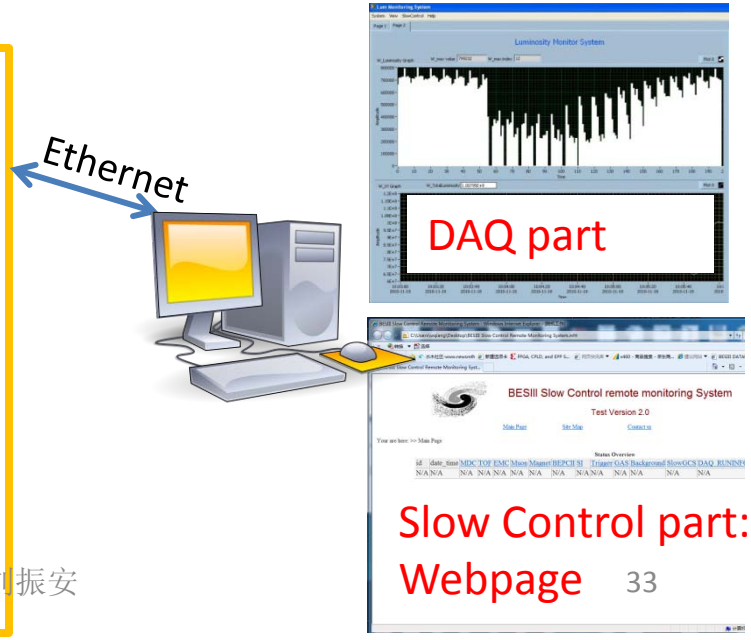

Current Status of luminosity upgrade

- Prototype of summing DAQ board is ready
- FPGA-based DAQ system(woftware) is ready
  - Embedded system design
  - Open source Linux port
  - Luminosity IP core
  - Device drivers
  - Socket programs
- Slow control webpage design is formed
- Signal processing board is in debugging

- AMC power module PCB design is ready

Prototype of DAQ board
A full-size, single-width AMC module

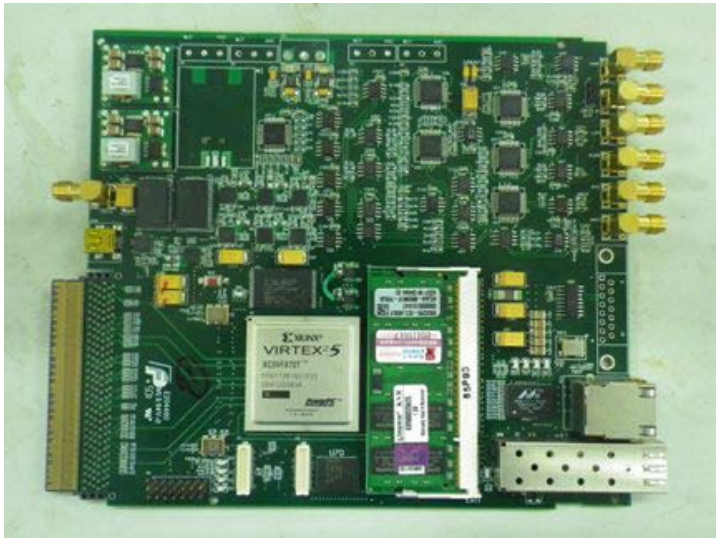

Signal processing board
A full-size, double-width AMC module

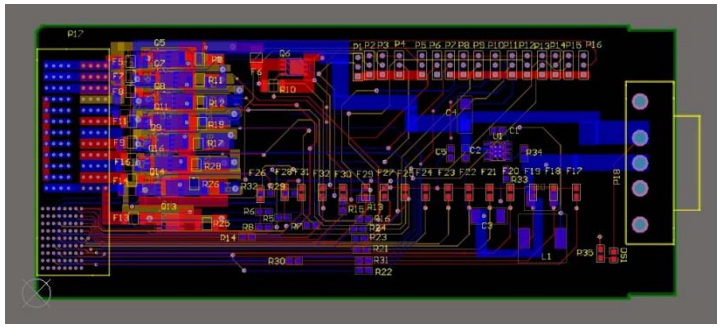

AMC power module

TREND Project: Radio Experiment for Neutrino Detection

Digitization in CPCI done, moving to xTCA

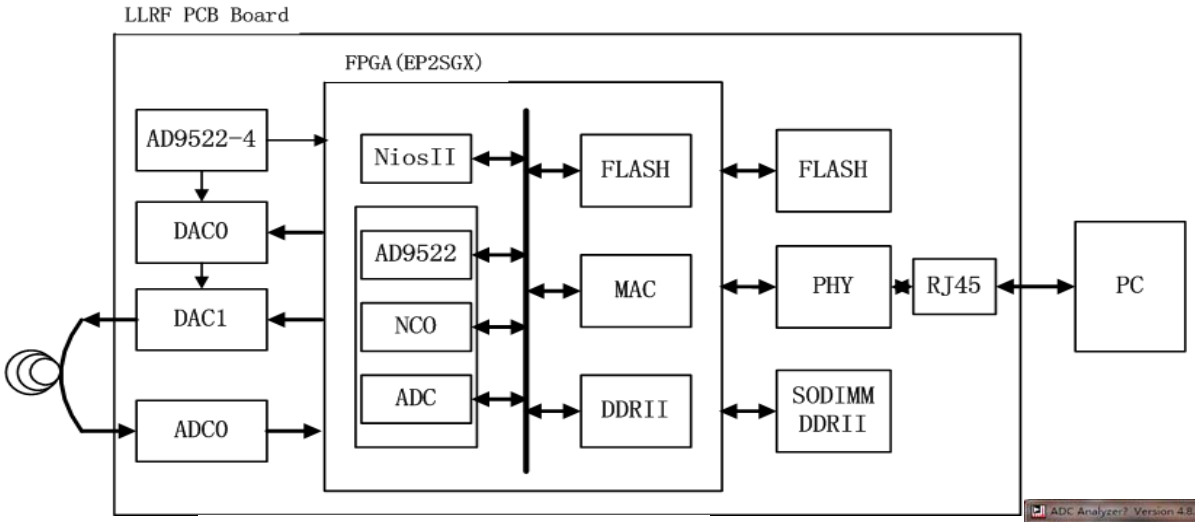

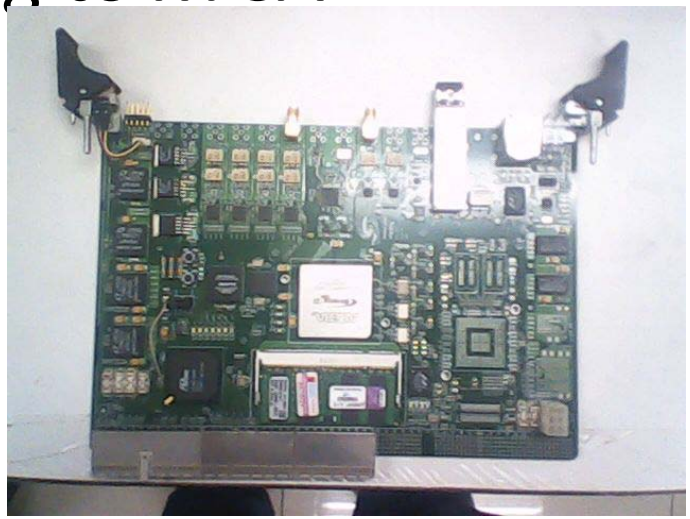

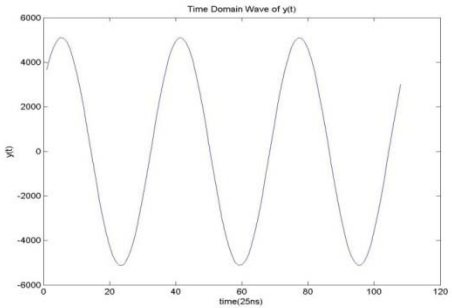

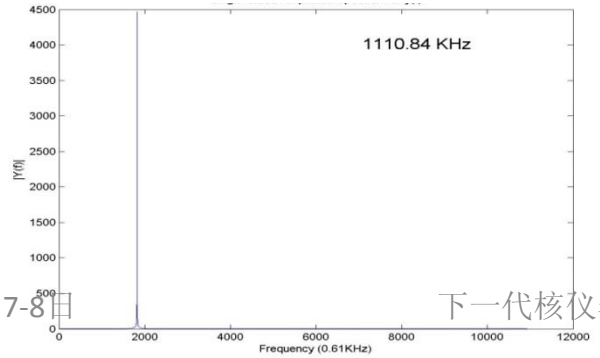

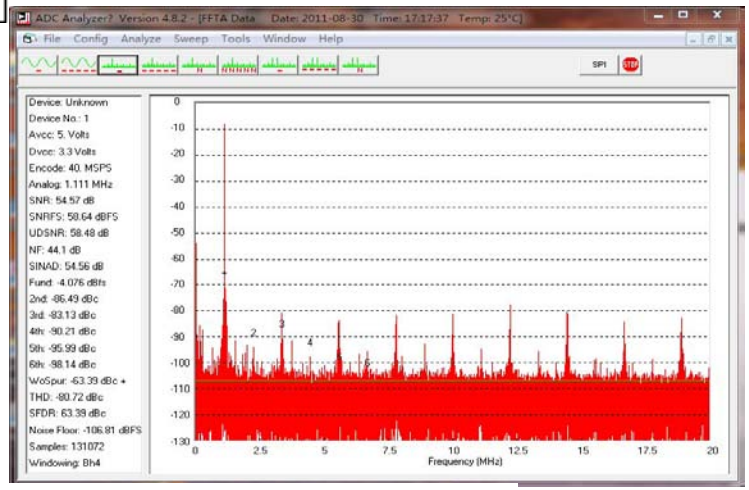

Sinewave Spectral Purity

Harmonic distortion

	≤ 3 Vpp[1]	> 3 Vpp
DC to 1 MHz	-60 dBc	-55 dBc
1 MHz to 5 MHz	-57 dBc	-45 dBc
5 MHz to 80 MHz	-37 dBc[2]	-30 dBc[2]

Machine control:

LLRF： Low Level Radio Frequency Control System

- Key Module
  - Digitizer board
- CPCI module moving to xTCA

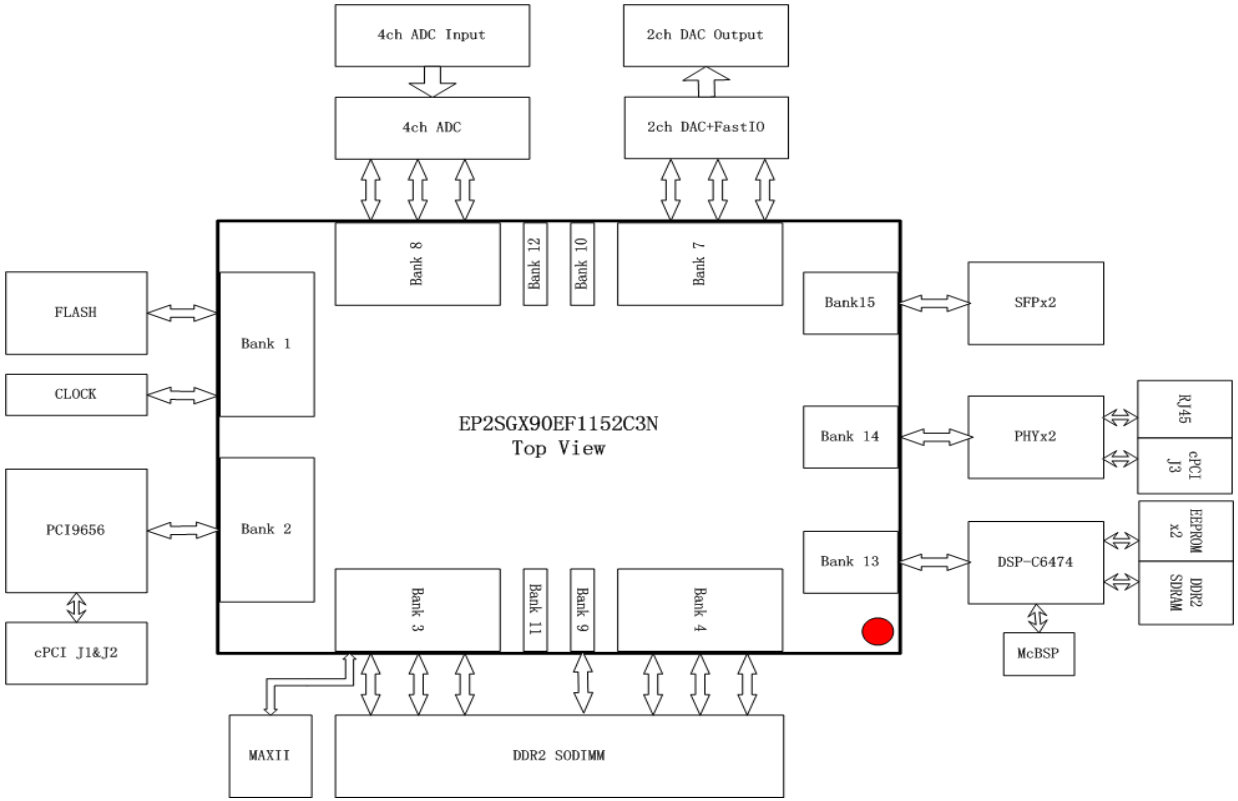

Summary

- xTCA specification has good shape
- xTCA related development at IHEP going well
- Application of xTCA development are also going well
- More application will be considered
- Collaboration International are welcome as is now
- Demestic collaboration are also welcome

Thanks for attention!