Practical Aspects of SRF Cavity Testing and Operations

Tom Powers

SRF Workshop 2011

Tutorial Session

INTRODUCTION

Over the past 22 years we have done about 3000 cold cavity tests on more than 600 different cavities at Jefferson Lab. Most of these tests were done with voltage controlled oscillator based phase locked loop systems. In addition to doing many of these test myself, I have been involved with the development, construction and commissioning of several cavity test systems and the software used to control them.

My hope today is to provide you with a basic understanding of the RF systems necessary to perform these tests. I hope you leave here with an understanding of the importance of calibration processes and the control and understanding of potential error sources. I will also provide some information relating to the practical aspects of operating SRF cavities in real machines.

The bulk of the cavity testing work as well as a complete set of equations necessary for calculating the cavity parameters and errors to those parameters may be found in a paper that was included as part of the SRF 2005 workshop proceedings.

OVERVIEW

- Voltage controlled oscillator based phase locked loops
- RF system overview for vertical testing.
- RF system overview for cryomodule testing.
- Coupler conditioning vacuum-RF feedback loop.
- Cavity resonance monitor
- Cable calibrations
- Cable break down in low pressure helium systems.
- Basic RF equations for critically coupled cavities.
- Basic RF equations for over coupled cavities.
- Qo measurements for cryomodules.
- Practical operational aspects of SRF cavities.

BASIC VCO-PLL

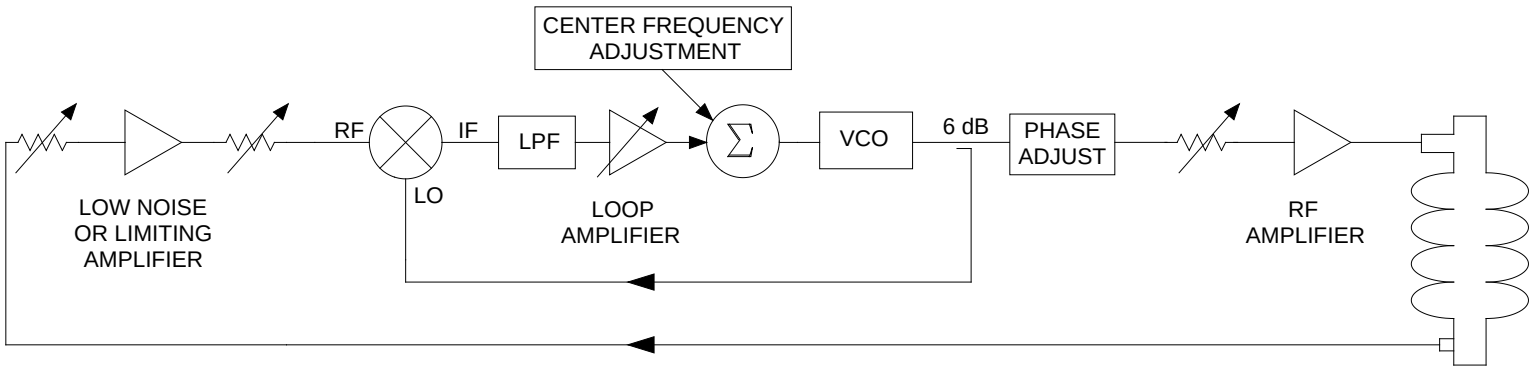

- **Two fundamental ways to drive a cavity.**
  - **Fixed frequency systems are used in conjunction with resonance controls like motorized tuners when operating fixed frequency systems in accelerators.**
  - **Variable frequency systems are used to simplify the system or to test cavities which do not have tuners attached.**
- **During vertical testing cavity bandwidths on the order of 1 Hz are not uncommon, it would be extremely difficult to maintain the cavity's frequency while testing.**
- **At Jefferson Lab we commonly use voltage controlled oscillator based phase locked loops to track the cavity frequency during the test.**

BASIC VCO-PLL

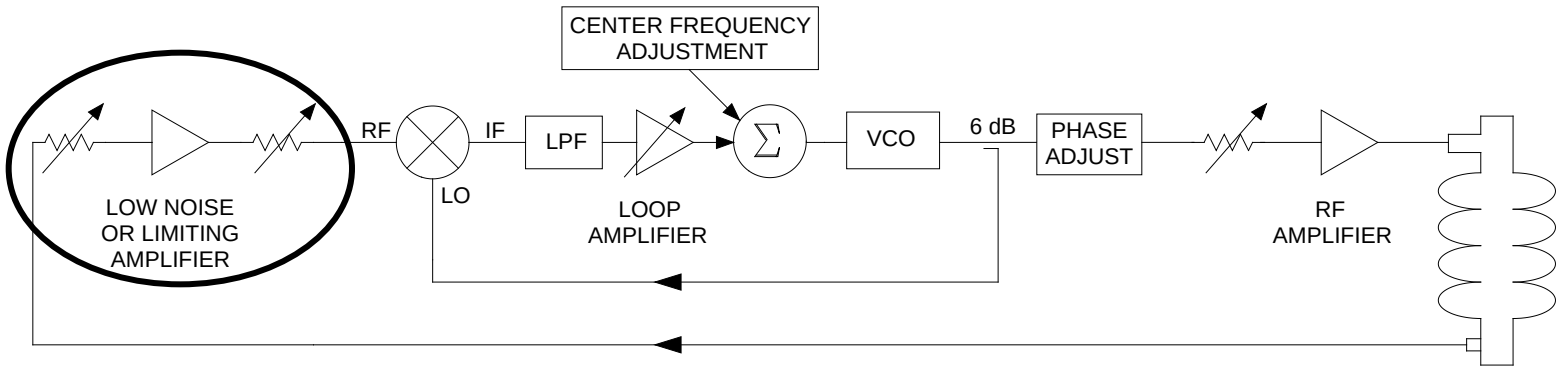

- **The front end generally makes use of a low noise amplifier and a series of variable attenuators which are used to:**
  - **Keep the mixer RF level below the maximum level, typically 6 dB below the design LO.**
  - **Ensure that the mixer and following loop amplifier, crystal detectors, etc. are not power starved.**
  - **Help to avoid loop oscillations.**
- **The loop gain is proportional to the cavity gradient. Thus a system that behaves well at 2 MV/m will very likely oscillate at 20 MV/m, unless the loop gain is reduced at higher gradient.**
- **Although difficult to find. Limiting amplifiers such as AmpliTec APT3-01000200-1515-D4-LM extend the dynamic range of the system while preventing oscillation.**

BASIC VCO-PLL

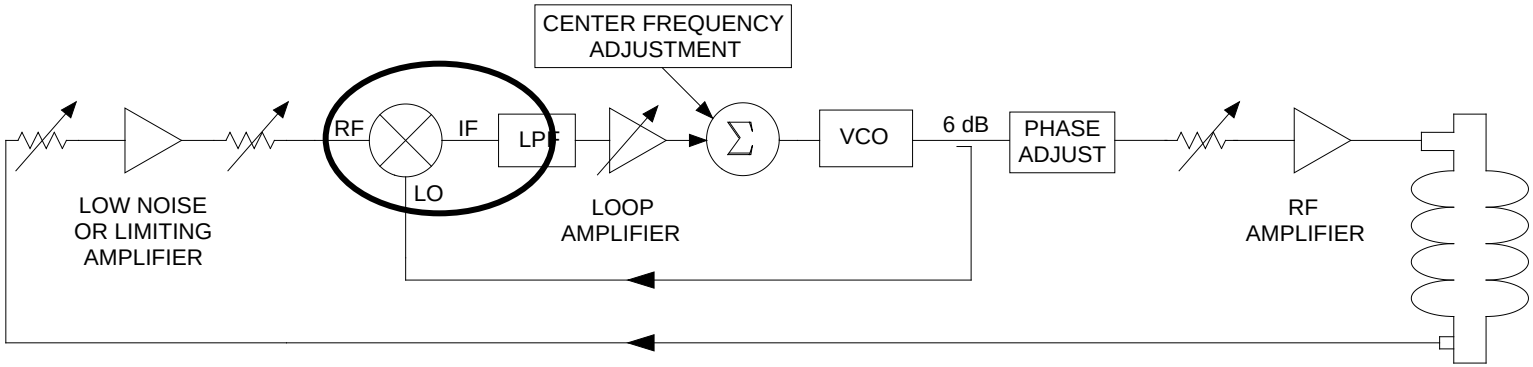

- **The mixer can be a simple double balanced mixer. Devices such as a mini circuits ZFM-150 are perfectly adequate.**
- **The mixer IF output must go to DC.**
- **Typically you are limited to somewhere between 7 and 13 dBm mixers by the output level of VCO.**
- **Higher IP3 mixers could be used at the cost of a larger amplifier between the VCO and the LO input. This would provide a better dynamic range.**
- **Part of the function of the low pass filter is to reject the second harmonic component of the mixer output.**

BASIC VCO-PLL

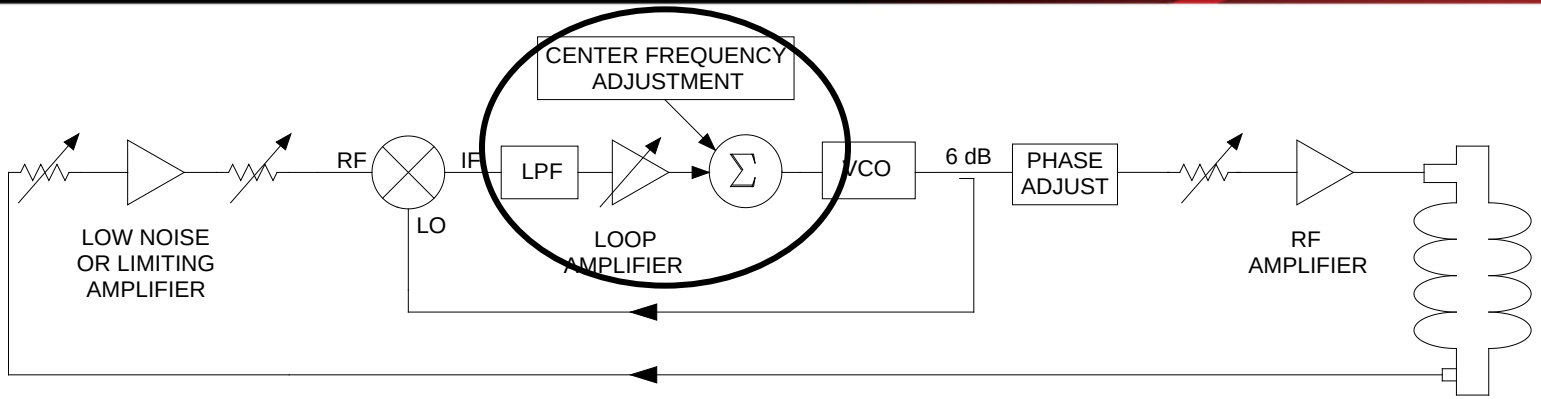

- **The secondary function of the low pass filter is to reduce the noise. To that end the bandwidth of the filter is typically 20 kHz.**
- **The variable gain amplifier circuit is used to adjust the loop gain.**
- **At the summing junction a center frequency adjustment signal is summed with the output of the loop amplifier, typically we use course and fine ten-turn potentiometers.**
- **In addition to a custom circuit designs, a Stanford Research SR560 can be used to implement the loop amplifier and filter blocks.**

NOTE: If a general purpose frequency source is used for the VCO the loop gain can be measured by manually adjusting the frequency by a fixed amount (i.e. 200 Hz) and measuring the shift in the loop frequency. The gain is the quotient of the two. Gains over 100 are considered acceptable.

BASIC VCO-PLL

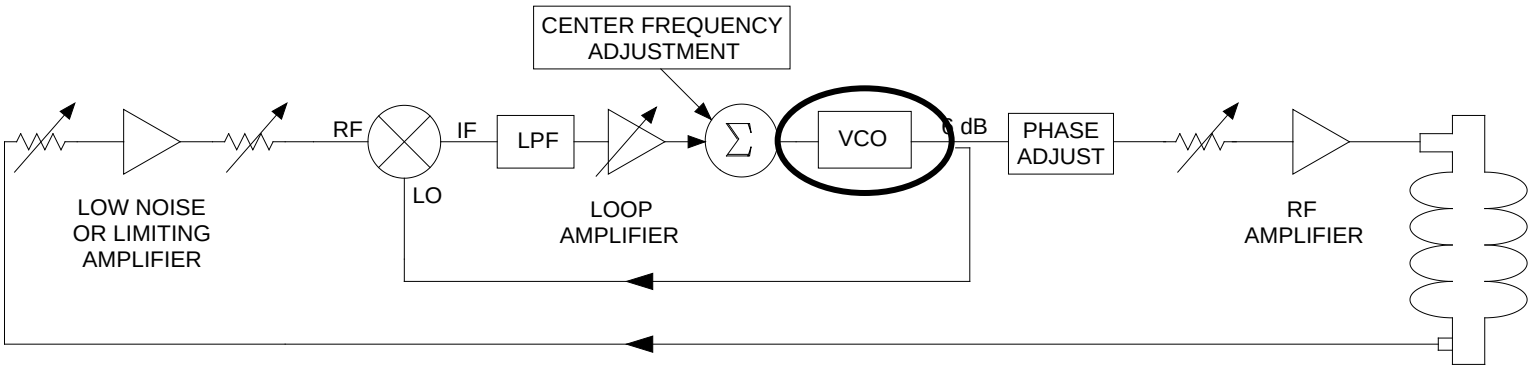

- **Inexpensive broad band devices are available from Mini Circuits for about $50.**
  - **Minus – These have very high tuning sensitivities on the order of 3 to 30 MHz/V.**
  - **Minus - With a wide frequency range they will be more susceptible to temperature induced drifts.**
  - **Plus – They can be used over a broad range without retooling.**
  - **Plus – Low cost**
- **Customized VCOs with thermal stabilization an narrow frequency ranges for about $1500**
  - **Plus – Low bandwidth crystal based devices are not sensitive to temperature drifts.**
  - **Plus – Moderate cost.**
  - **Minus – Can not be used to tune to the different pass band frequencies.**
  - **Minus – Narrow band required for different cavity frequencies.**

RF source based VCO such as an Agilent E4422B for about $12,000.

- **Plus – Low bandwidth to reduce noise issues**
- **Plus – Flexible and stable frequency source**
- **Plus – Has simultaneous AM modulation capabilities which are useful for cavity conditioning, etc.**
- **Minus – High cost device.**

BASIC VCO-PLL

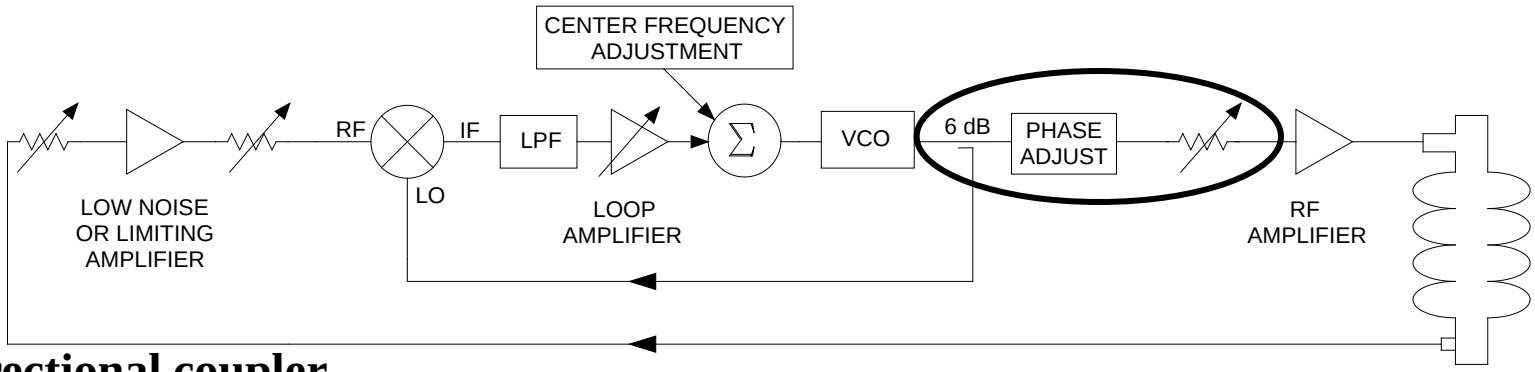

- **Directional coupler.**
  - **Coupling dictated by a combination of VCO output level and Mixer LO requirement.**
  - **LO path may require an amplifier to ensure the proper drive level for the mixer.**
- **Phase Shifter***
  - **Typically mechanical phase shifters are used such as Narda 3752 or Arra D3428B .**
  - **Ensure that they provide at least 190 degrees of phase shift at the frequency of operation.**
- **Variable Attenuator***
  - **Typically both continuous and step mechanical attenuators are used for manual systems Narda, Arra manufacture both. Caution should be used if a PIN attenuator is used as it will strongly affect the loop phase**

***Vector Modulators are frequently used to supplement the phase shifter and replace the mechanical attenuators.**

- **Analog Devices as well as several other manufactures produce integrated circuits with analog controls**
- **GT Microwave, and others make connectorized devices with digital controls.**

OPTIONAL TOPOLOGY

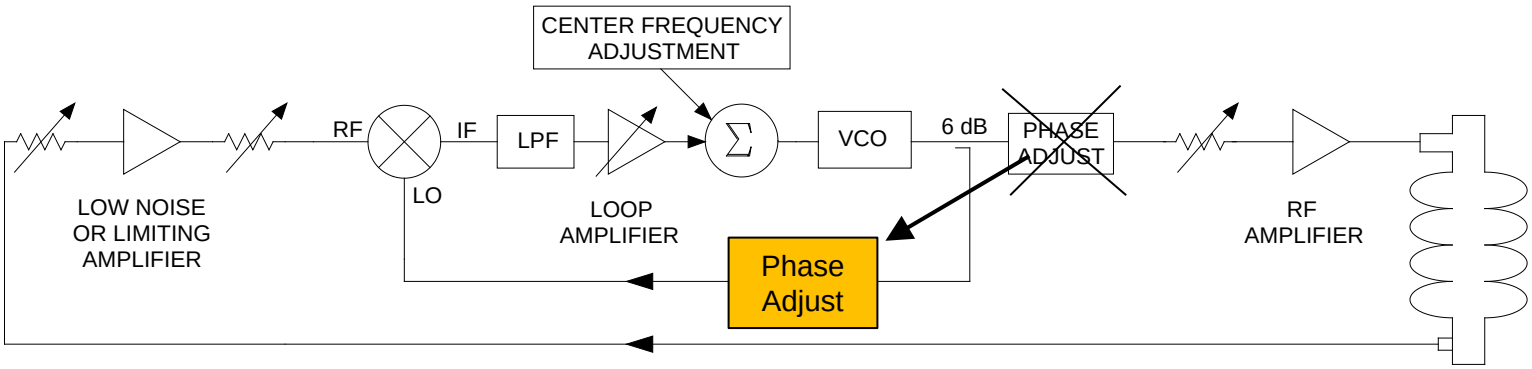

- **Problems:**
  - **Vector modulators and electronic phase shifters can introduce attenuation as a function of phase settings.**
  - **This is especially true for analog vector modulator where one can easily see changes in amplitude of 1 dB as you shift the phase a few degrees. Especially around 0º, 90º, 180º, and 270º.**
- **Solution: (Idea seen at INFN Legnaro)**
  - **Move phase shifter from the output path to the feedback loop which drives the local oscillator port on the mixer.**
  - **Insure that the nominal mixer input level is 2 dB or 3 dB higher than nominally necessary so that amplitude variations in the phase shifter do not in negatively impact operations**

PLOT OF PHASE AND AMPLITUDE ON CAVITY

Phase and Amplitude Transfer Function of a Cavity

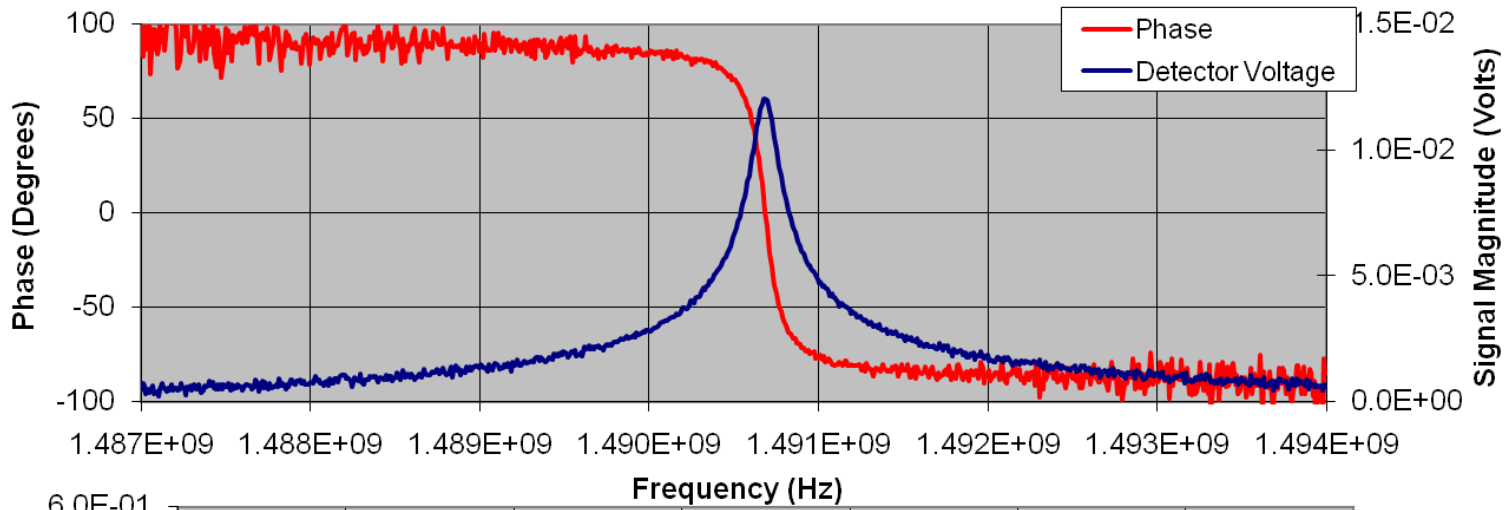

Output of Mixer (i.e. ψ x V)

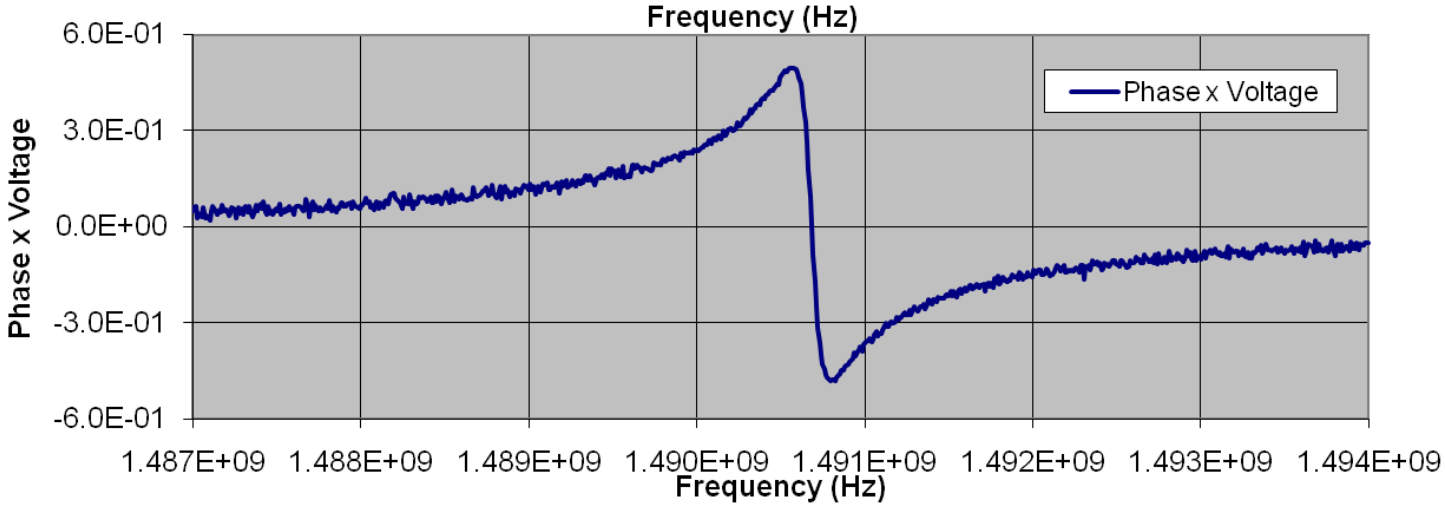

The filtered output of a mixer is the product of the signal voltage and phase.

PLOT OF PHASE AND AMPLITUDE ON CAVITY

Phase and Amplitude Transfer Function of a Cavity

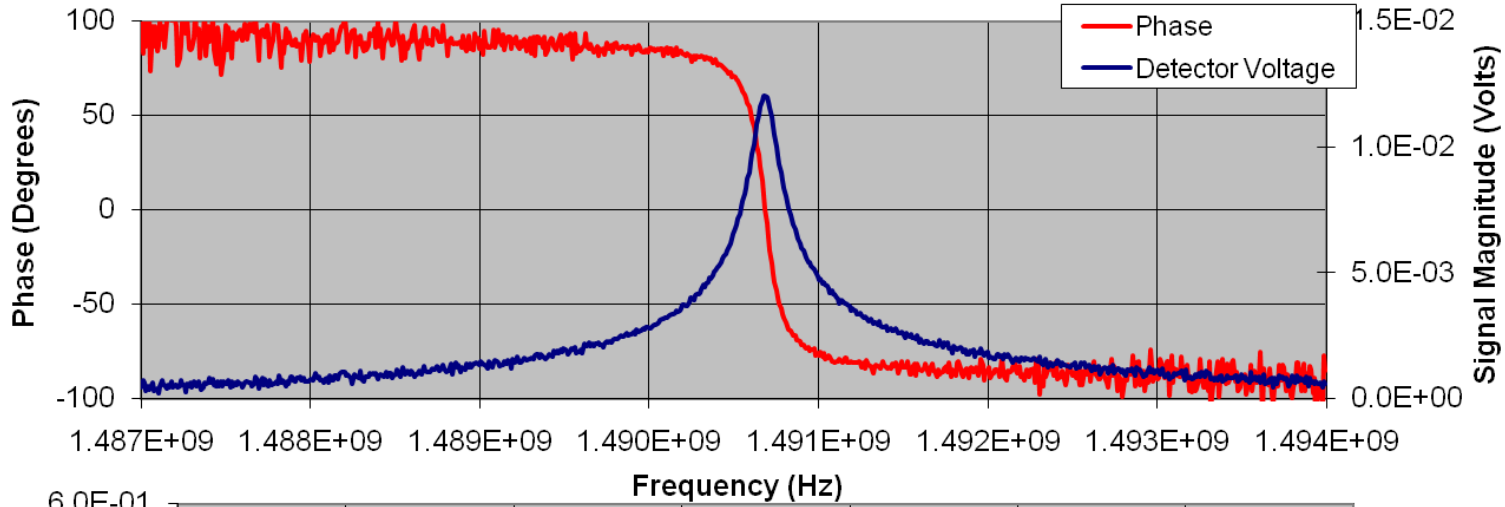

Output of Mixer (i.e. ψ x V)

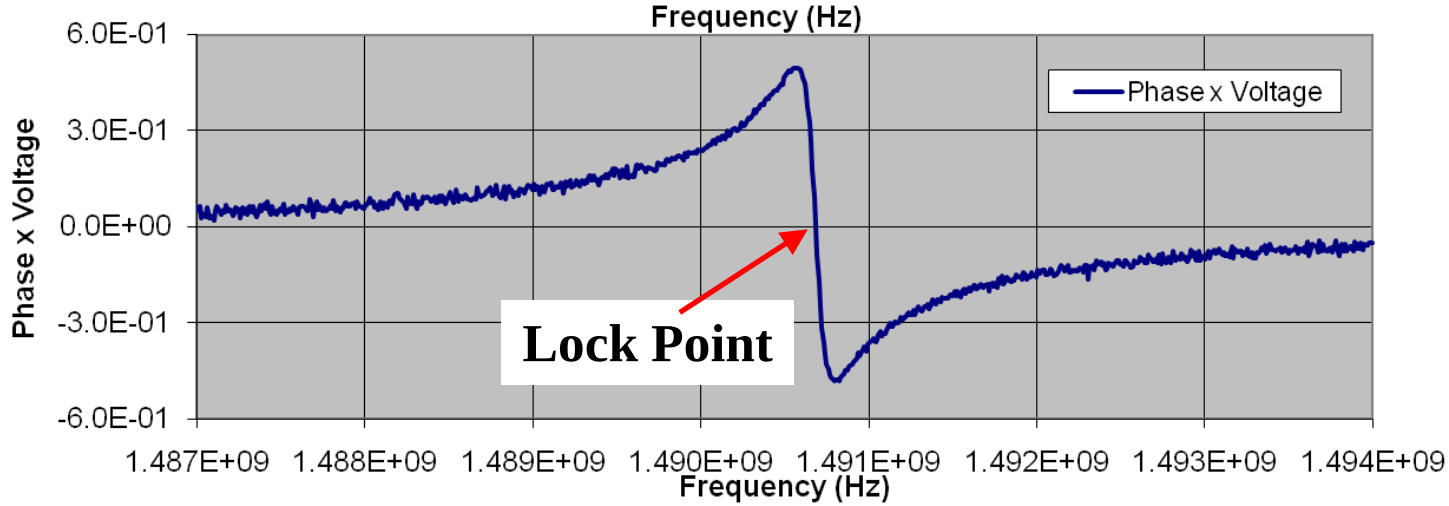

The phase lock loops locks on the zero crossing. Closing the loop switch when you are 180° out of phase will cause the system to drive away from the lock point.

Complete Low Level System Layout

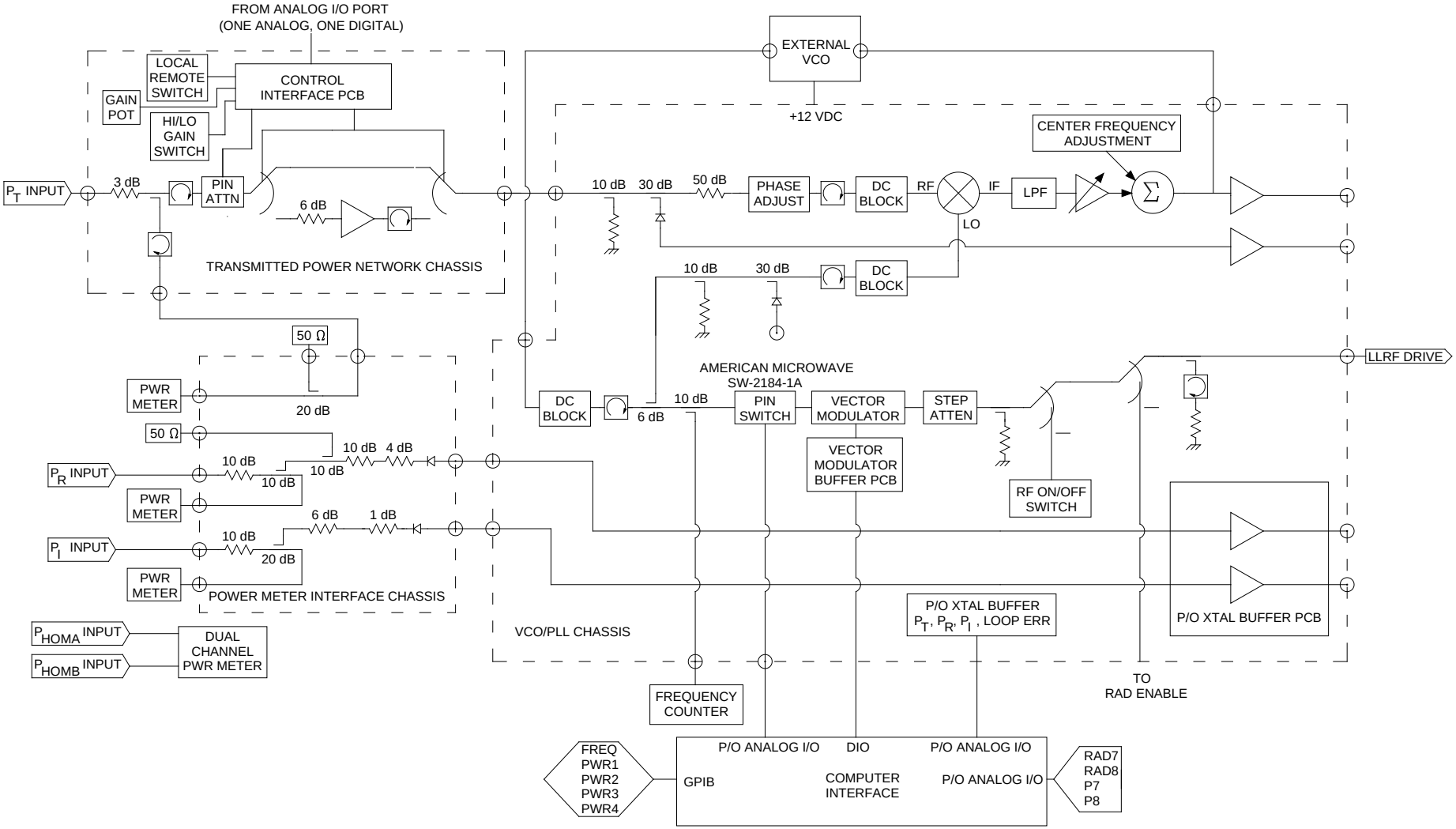

Complete Low Level System Layout

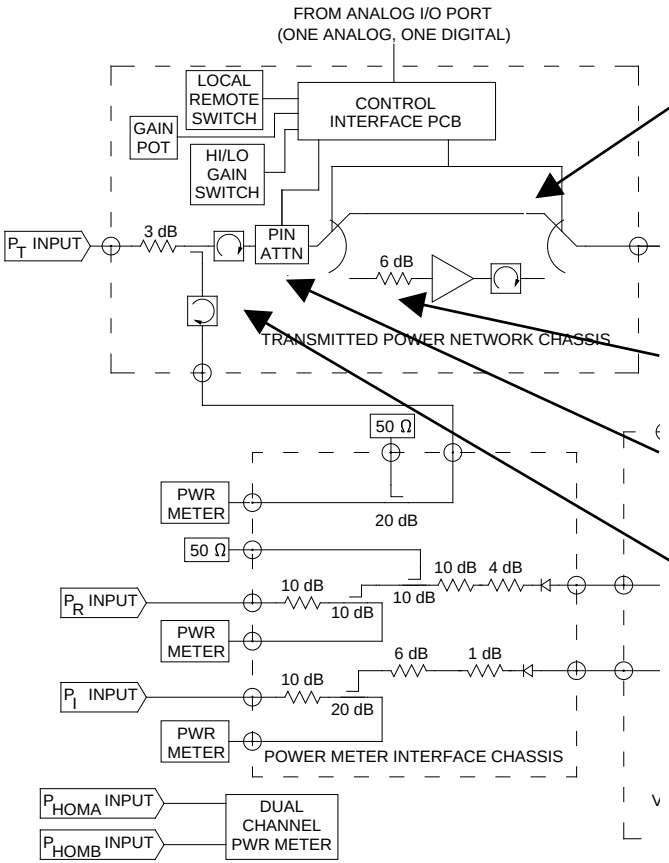

The transmitted power network has a switchable LNA and variable attenuator, both can be controlled by the computer.

The 6 dB pad before the LNA ensures that there is a minimal gap in the continuous gain control settings. Without it there would have been a 12 dB dead band.

The phase shift associated with the PIN attenuator was measured and included as a lookup table in the program. The compensation values are factored into the vector modulator algorithm.

Circulators are used to reduce the mismatch and ensure more stable power meter calibrations. The 10 dB attenuators used in the incident and reflected power path also serve that purpose

Only low drift fixed devices are used between the power meters and the cavities.

COMPLETE LOW LEVEL SYSTEM LAYOUT

The VCO was moved to an external location so that it could be thermally stabilized. This also allows us to use alternate VCOs.

The 50 dB attenuator was necessary due to the excessive tuning sensitivity of the VCO, which is 5.6 MHz/V.

Crystal detector gain set to reduce the square law errors while maintaining a 1 V amplitude at the DAQ input.

Even though there is a vector modulator, there is a mechanical phase shifter which is used frequently.

Computer controlled vector modulator is used for amplitude and phase control.

All crystal detector signals are buffered and available for observation using an oscilloscope.

Computer controlled and automatic data acquisition ensures repeatable data and methods independent of operator.

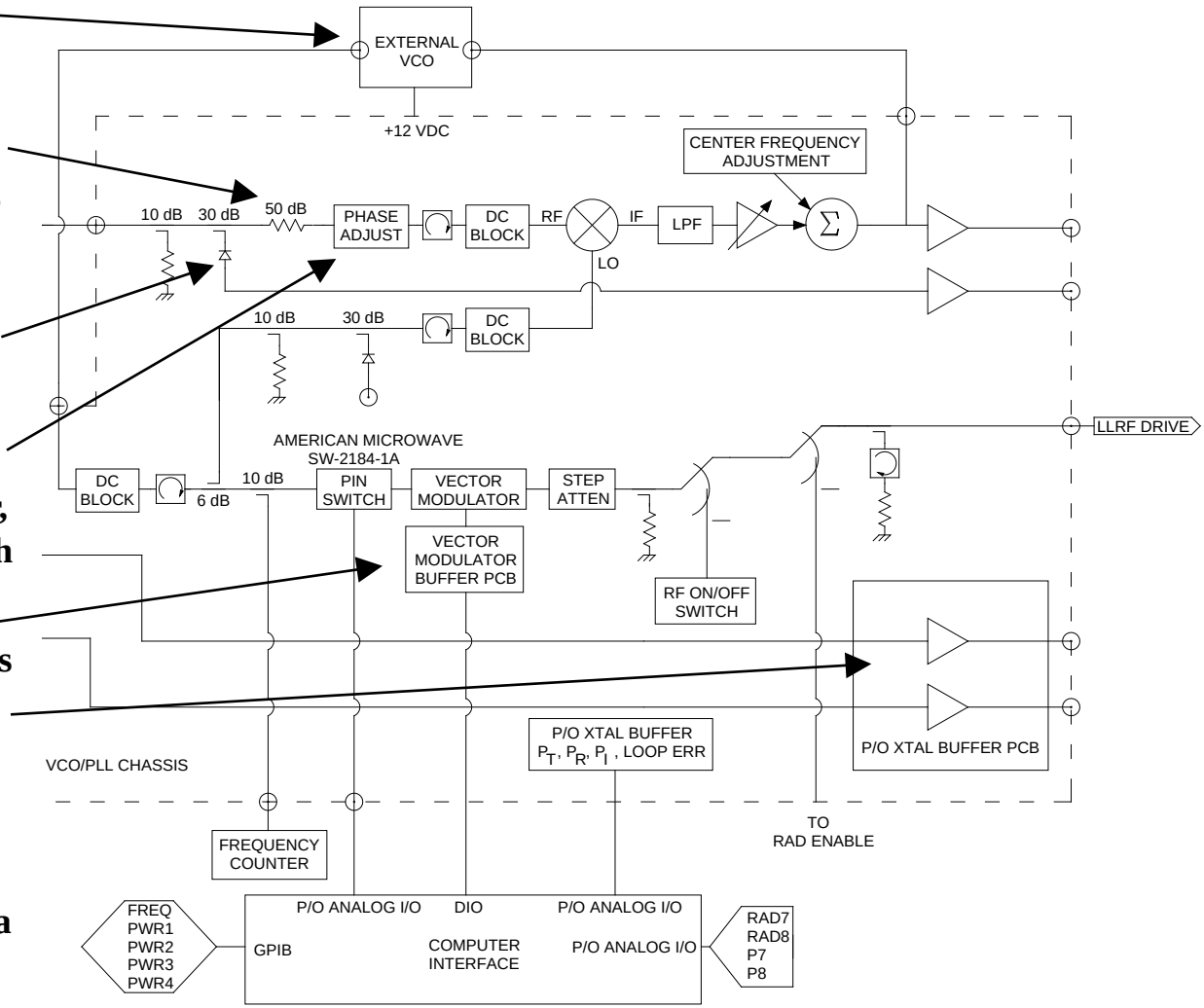

INTERLOCKS FOR VERTICAL TESTS

- **During vertical testing medium power amplifiers between 100 W and 500 W are used to drive the cavities.**
- **No cavity protection interlocks are used during these tests at Jefferson Lab. Each facility and test should be evaluated individually.**
- **Field emission radiation does present a safety hazard. This is mitigated during vertical testing at Jefferson Lab by using one of 6 shielded vertical dewars.**
- **High power RF can not be applied to an accelerating structure until the PSS system confirms that the dewar shield lid is closed.**
- **Low power, less than 1 W, must be applied to the system in order to calibrate the cables.**
- **A switching system shown here was implemented to perform these functions for "R&D" testing.**
- **A similar switching system, along with dewar selection switches and permanently installed cables, was implemented for the production system.**

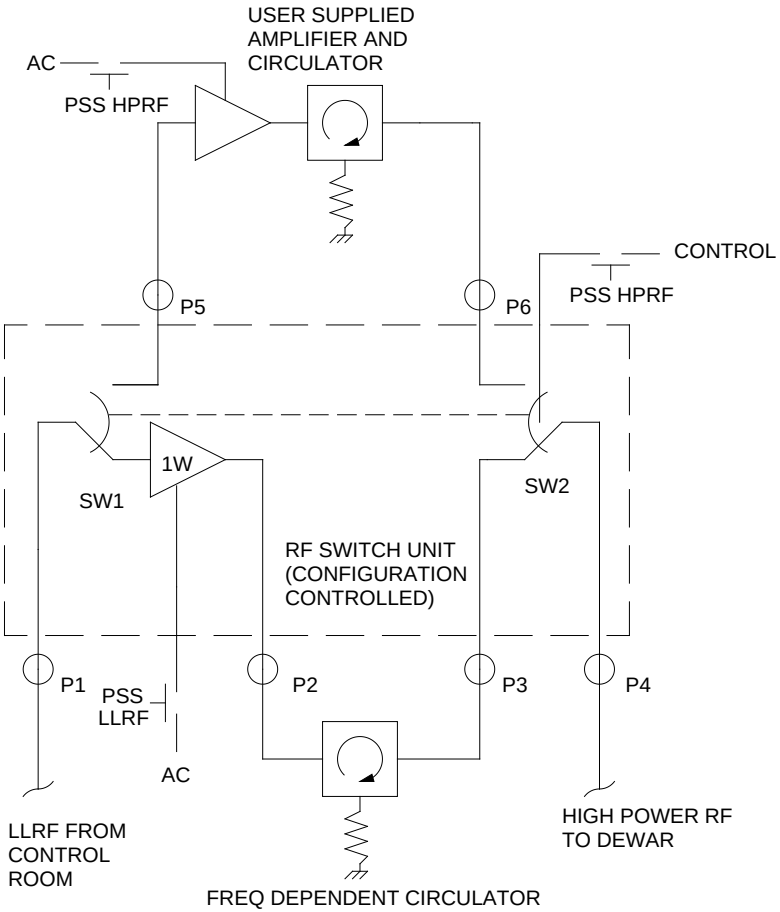

CRYOMODULE TEST SYSTEM LAYOUT

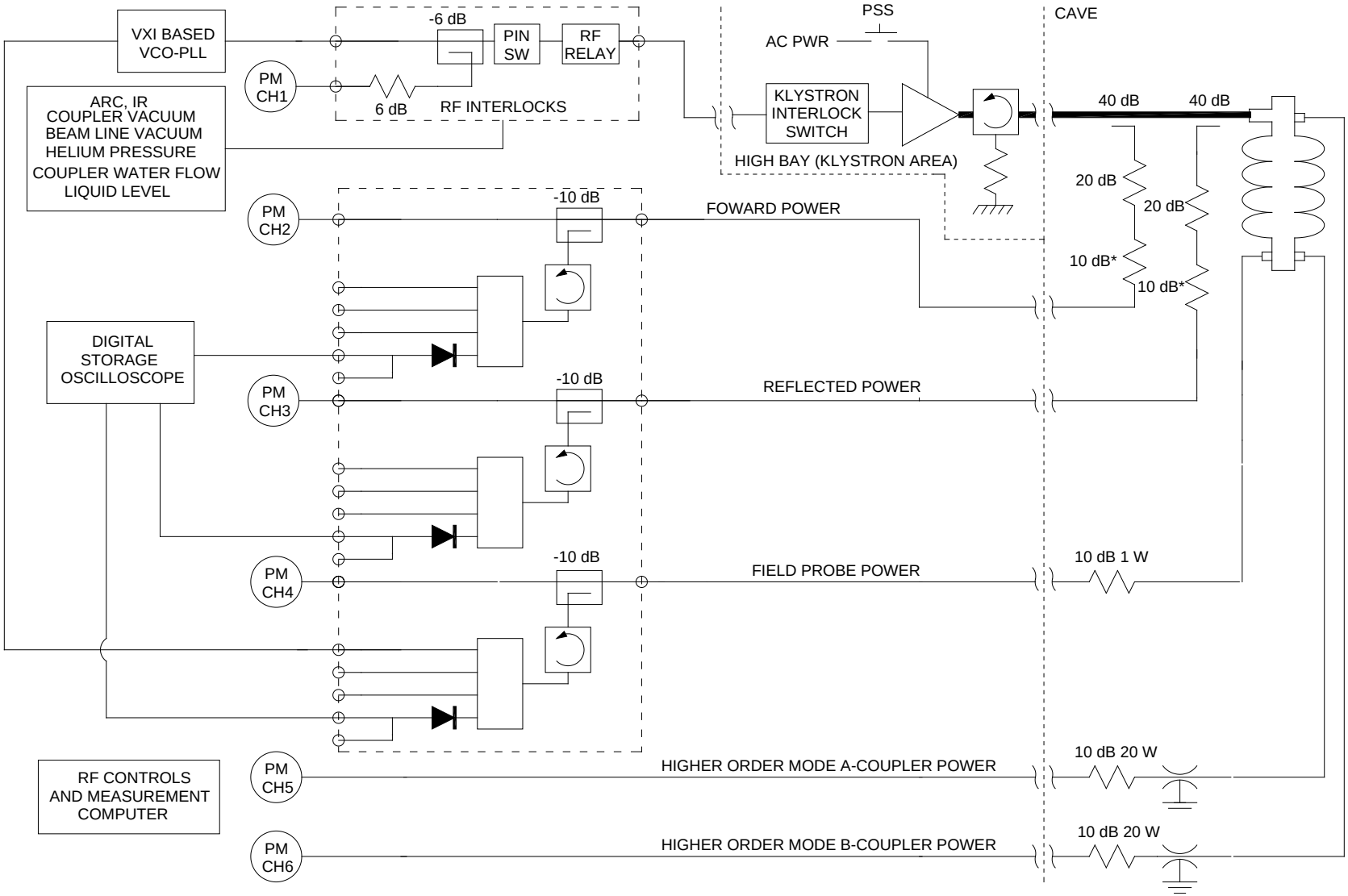

CRYOMODULE TEST SYSTEM LAYOUT

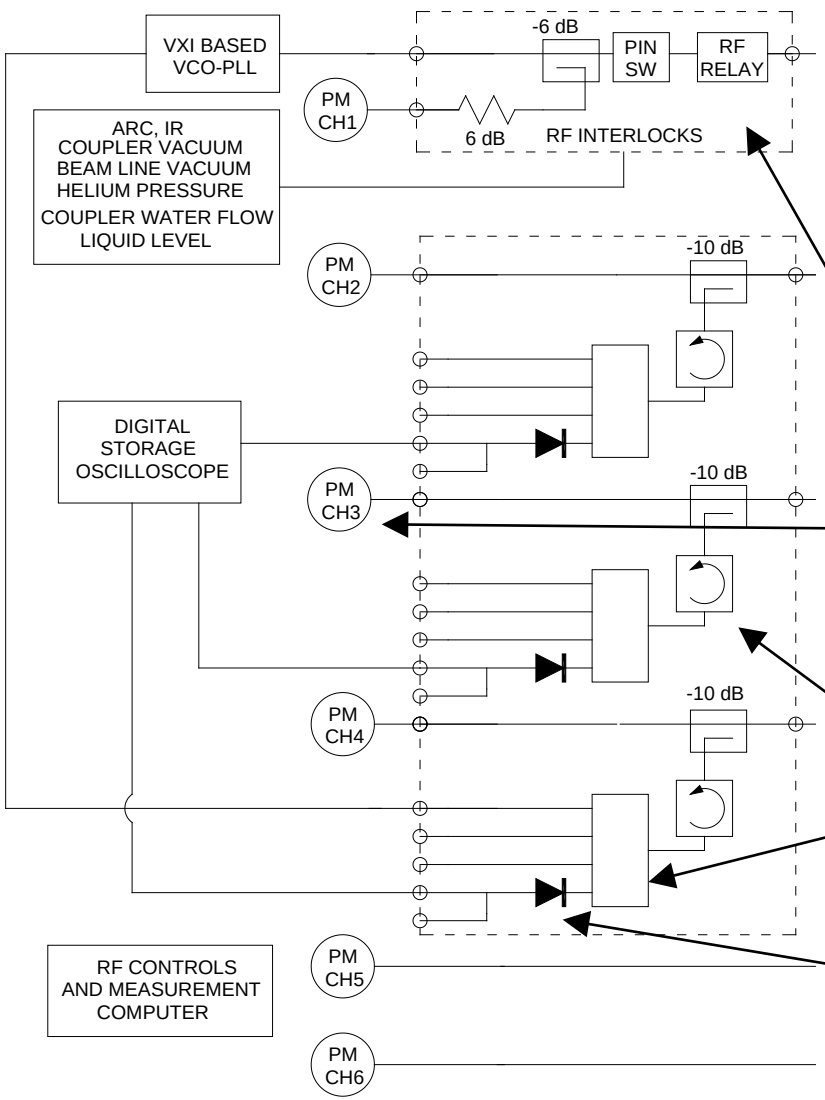

Due to the excessive costs to recover from a coupler failure. Full interlocks were implemented for the system, including:

- **Arc**
- **Infrared**
- **Coupler and cavity Vacuums**
- **Helium pressure and level**
- **Coupler cooling water flow**

Use of the interlocks was mandatory for all high power operations.

Boonton 4532 pulsed RF power meters were used to acquire waveform records of the pulsed RF power data.

A software interlock was added based on HOM coupler power levels.

Circulators added to ensure that user changes to the other outputs would not affect calibrations.

4-Way splitters added so that the RF signals could be used by other systems in parallel with the standard data acquisition process.

Crystal detectors used for operator feedback only.

Computer controlled and automatic data acquisition was necessary for calibration of the field probes using an emitted power technique.

CRYOMODULE TEST SYSTEM LAYOUT

Personnel safety system provides a permit to allow high voltage operation of the klystron. Operations at less than 1 W allowed without a PSS interface.

Waveguide directional coupler placed in the middle of a 4 m run of waveguide in order to avoid errors due to evanescent modes.

Attenuators were distributed throughout the system in order to reduce the susceptibility to standing wave induced errors.

Polyphaser B50 or MR50 series lightning arrestors were added to the HOM ports after several RF power heads and medium power attenuators (20 W-CW and 500 W-PK) were destroyed. Excessive power was observed on a crystal detector when a cavity had a thermal quench.

At times during the SNS testing a 20 kW CW klystron was substituted for the 1 MW pulsed klystron. Stub tuners and iris plates were used to modify the input coupling of the system. Maximum CW power levels were limited by the coupler power capacity.

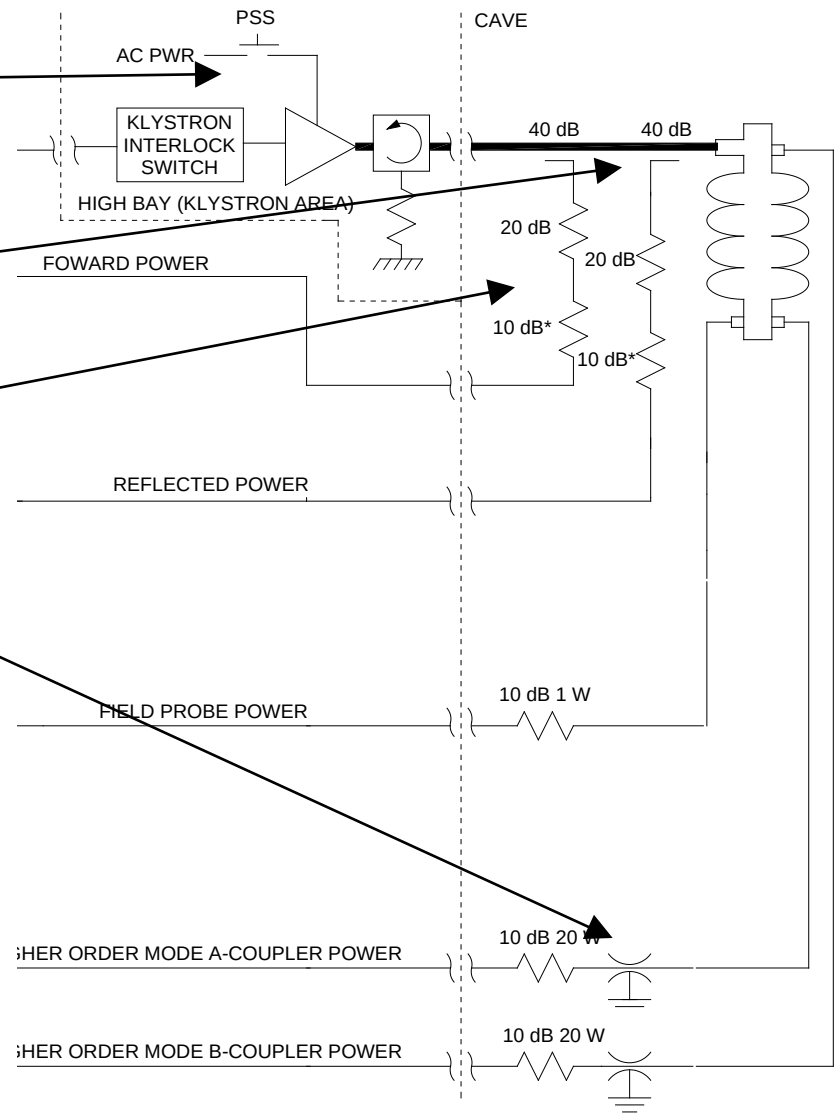

VTA TEST SYSTEMS

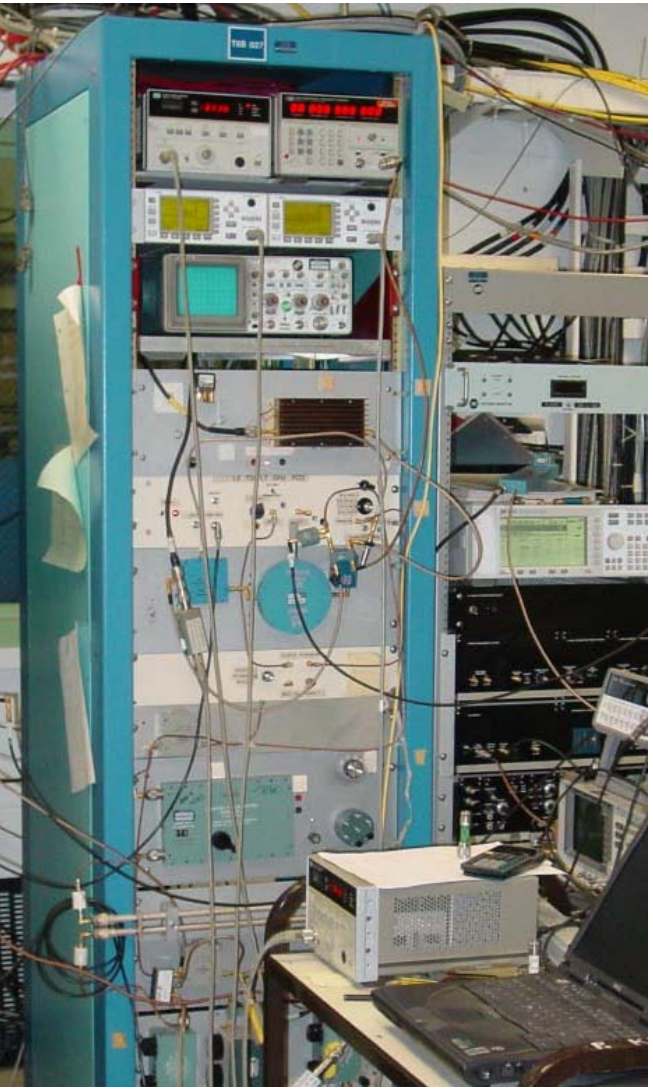

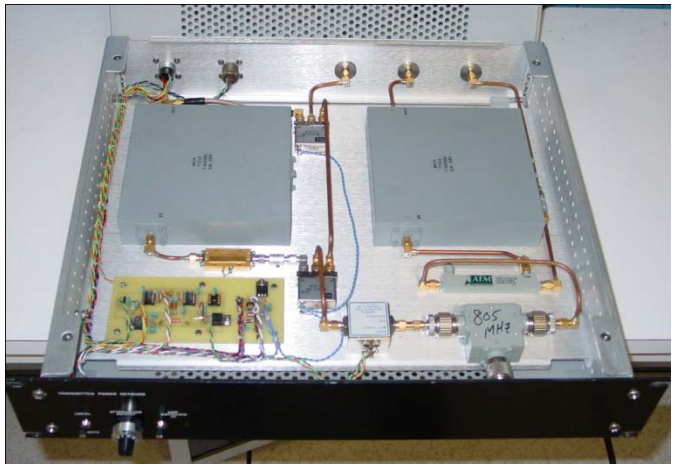

Chassis from 805 MHz production system.

500 to 1000 MHz VCO-PLL System used for SNS Production

500 to 3,000 MHz VCO-PLL system used for research and development

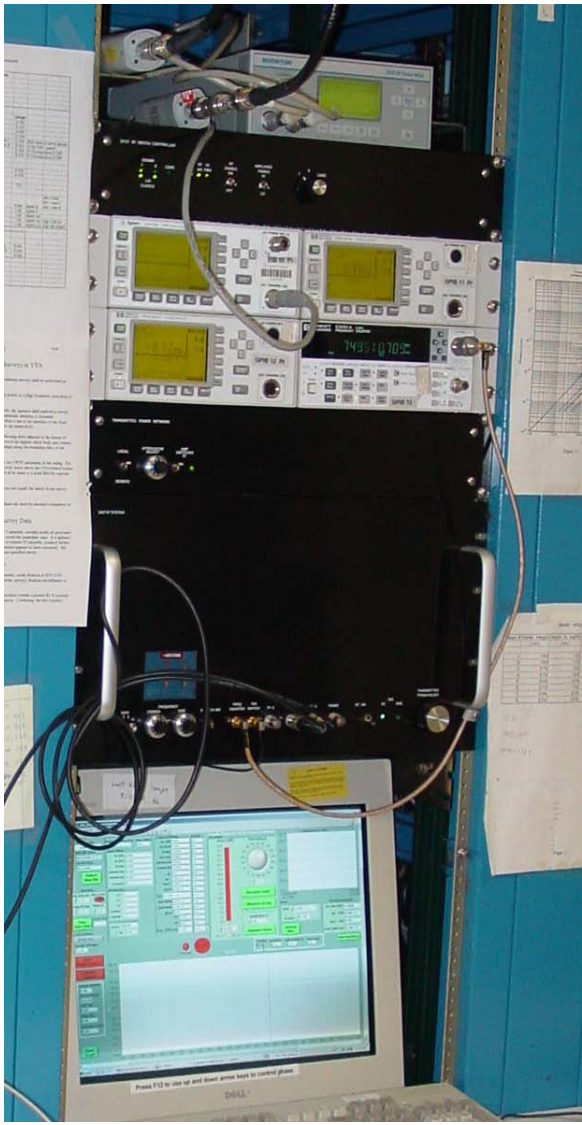

VERTICAL TEST AREA TESTING PROGRAM

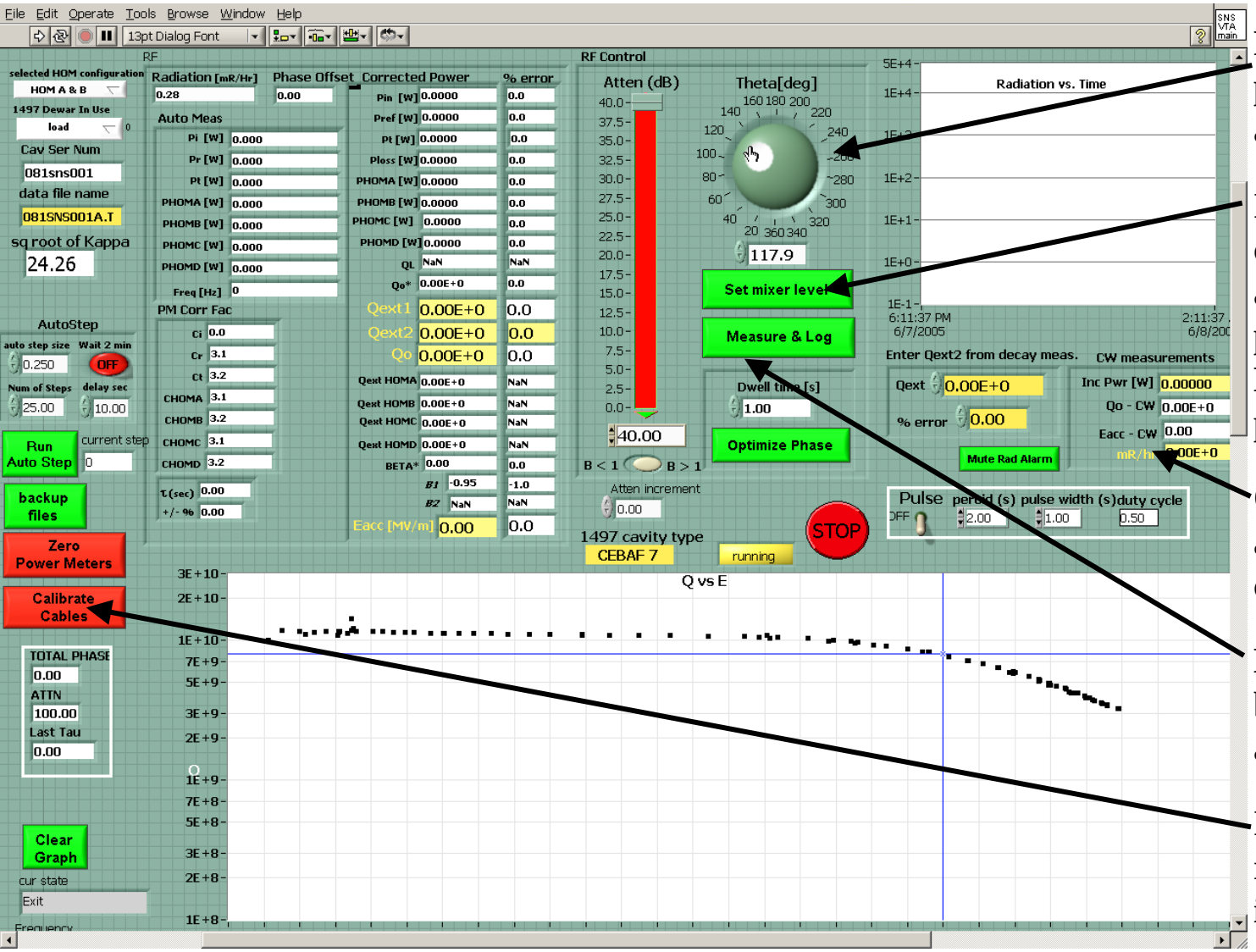

Forward power and phase controlled via an I/Q modulator

Internal algorithm controls LNA and PIN attenuator to ensure proper signal levels for Mixer and transmitted power crystal detector.

Qo, incident power, and gradient continuously updated.

Measure and log button updates graph and logs data to a file.

Interactive calibration routine with imbedded instructions.

CRYOMODULE TEST FACILITY CONTROL ROOM

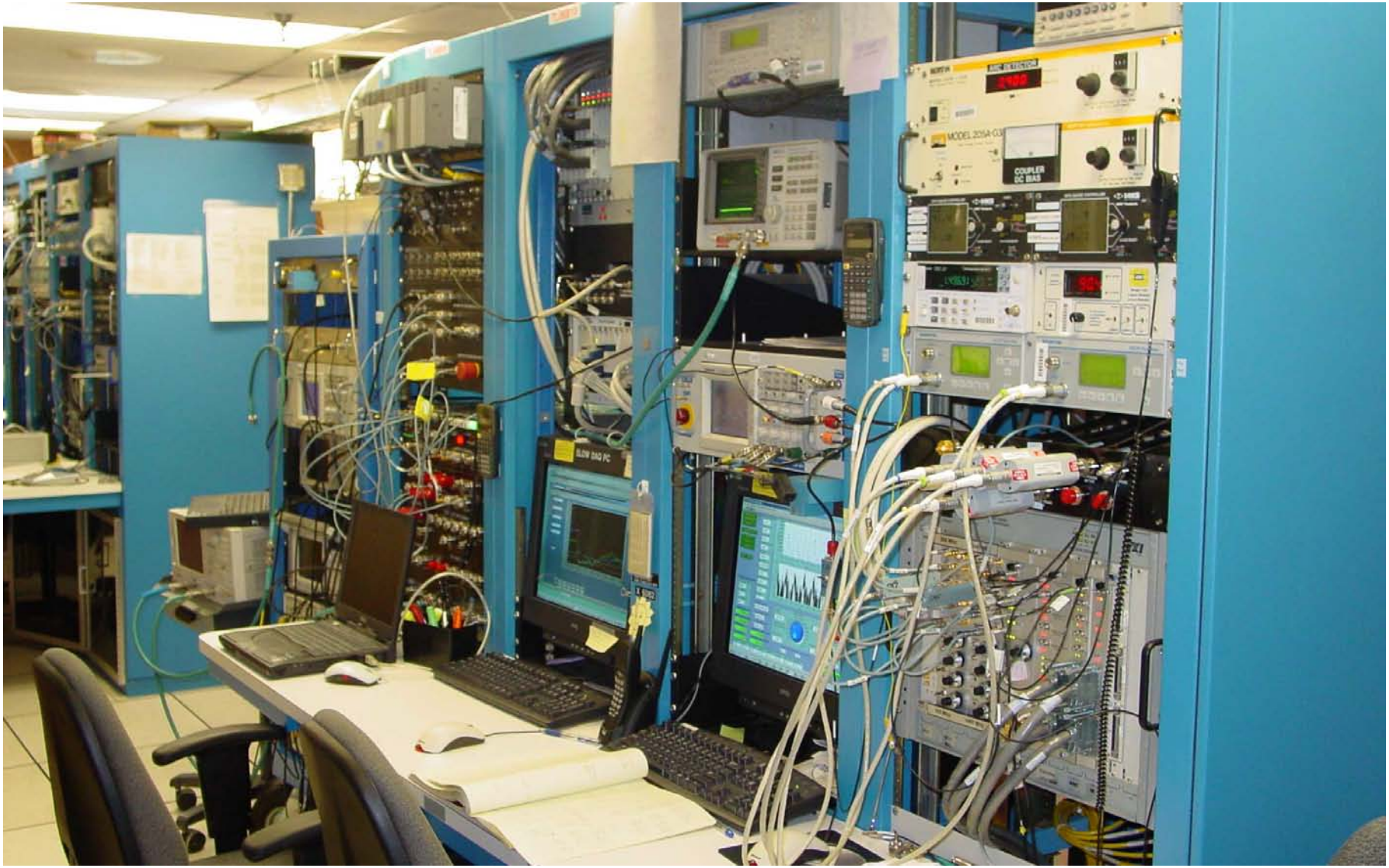

CRYOMODULE TESTING PROGRAM

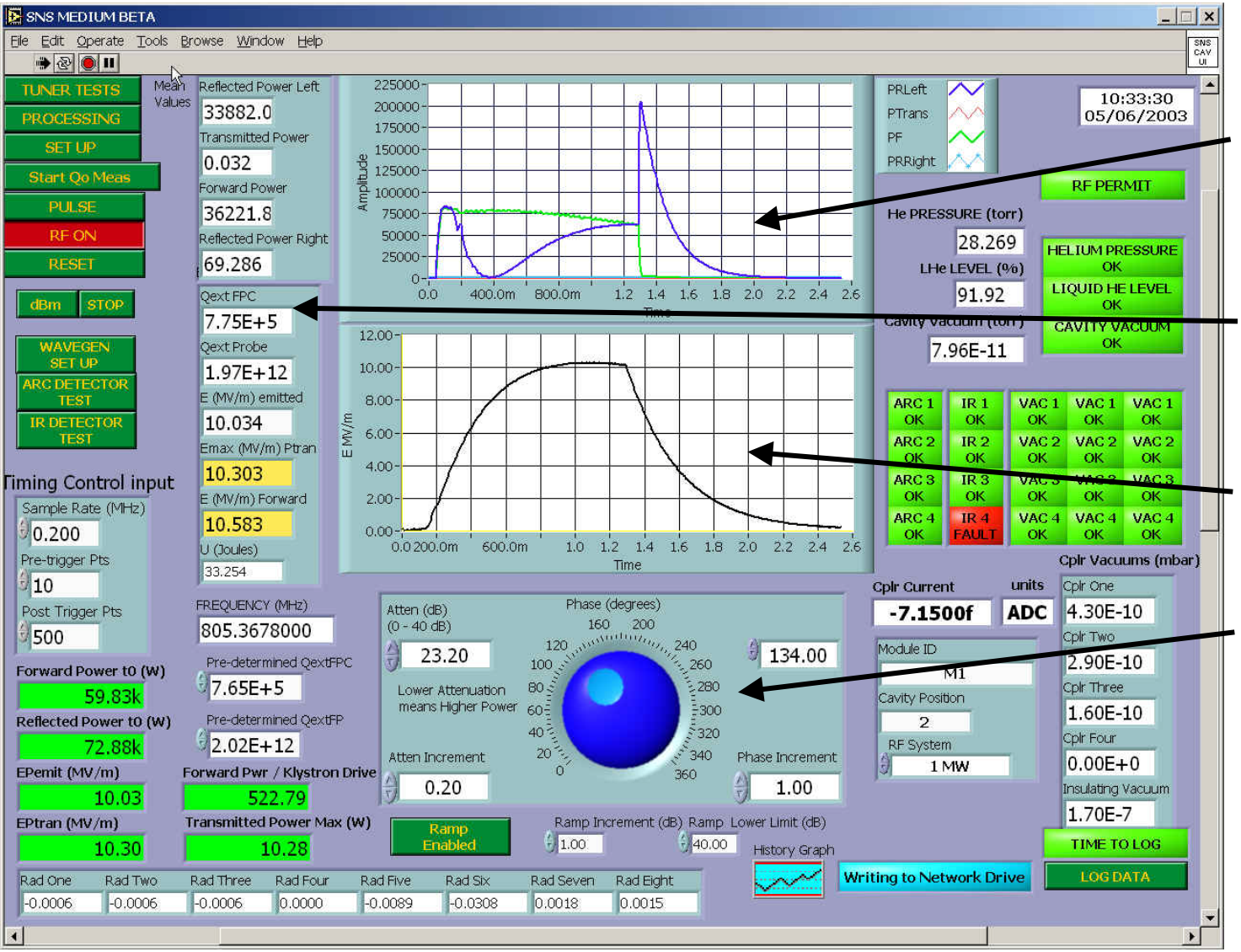

"Real time" gradient and forward and reflected power waveforms shown (supplemented with crystal detectors and an oscilloscope)

Loaded Q, Field Probe Q, gradient, and emitted power calculated on each pulse.

Gradient waveform based on an entered value of the field probe Q.

Forward power and phase controlled via an I/Q modulator.

Data continuously logged to a network drive. Waveforms recorded on request.

DIGITAL LLRF SYSTEM FOR VERTICAL AND HORIZONTAL TESTING

- **Digital low level RF systems (LLRF) have become common in accelerator applications.**
- **Digital LLRF systems can be used in a Self Excited Loop mode to track the frequency of a cavity.**
  - **JLAB has in the process of implementing such a system in the Cryomodule Test Facility where the cavity bandwidths are 100's to 1000's of Hz.**
  - **We have locked cavities and done decay time constant measurements for the wider bandwidth cavities using a digital LLRF system.**
  - **We have not attempted to lock to a cavity with 1's of Hz of bandwidths (i.e. VTA tests)**
- **Concerns/drawbacks.**
  - **Limited frequency range, typically <100 kHz before you have to change your LLRF clocking frequencies.**
  - **Limited dynamic range of the front end electronics and ADCs which limits accurate RF Power measurements and the ability to lock at very low electric fields.**

VACUUM CONDITIONING CONTROLLER

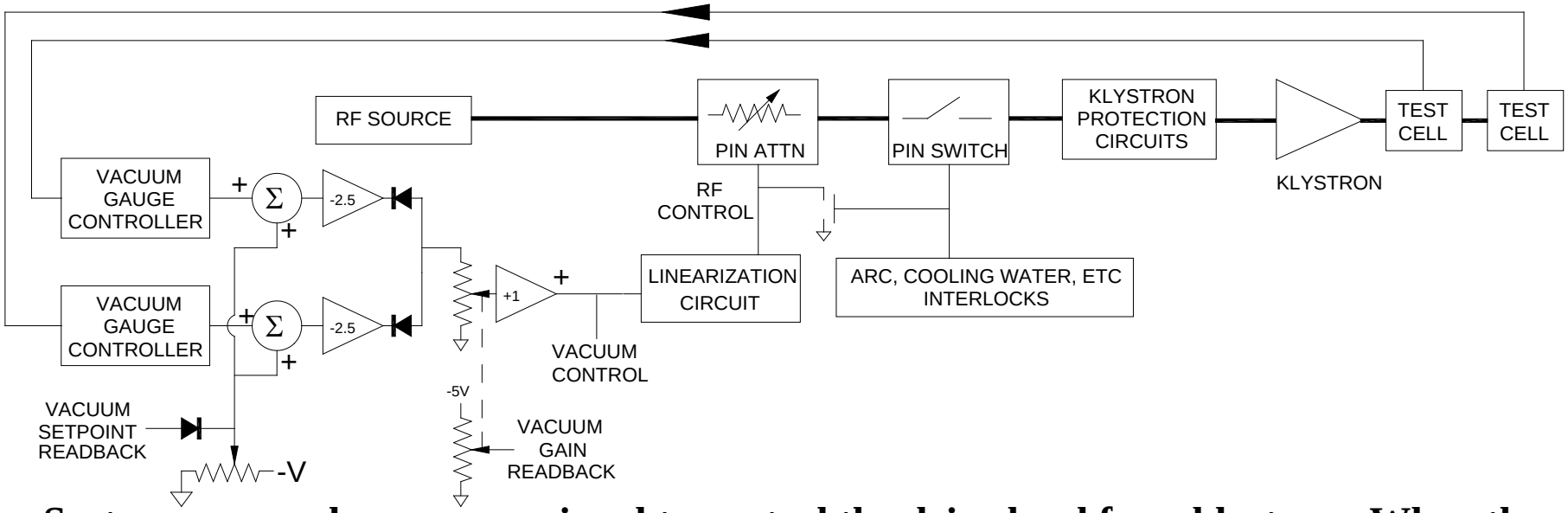

- System uses analog vacuum signal to control the drive level for a klystron. When the vacuum signal increases the PIN attenuator reduces the RF Drive signal
- Diode adder ensures that the larger of the two vacuum signals controls the feedback.
- Separate vacuum set point and gain control with analog read back
- Redundant switching of RF in the event of an interlock fault.
- Ones of millisecond response time achieved. Limited by vacuum gauge controller.
- Phase shift associated with PIN attenuator may cause problems when operating a cavity with a VCO-PLL. . The Hittite HMC473M although more difficult to bias has a very low phase shift over a 30 dB range.

CAVITY RESONANCE MONITOR

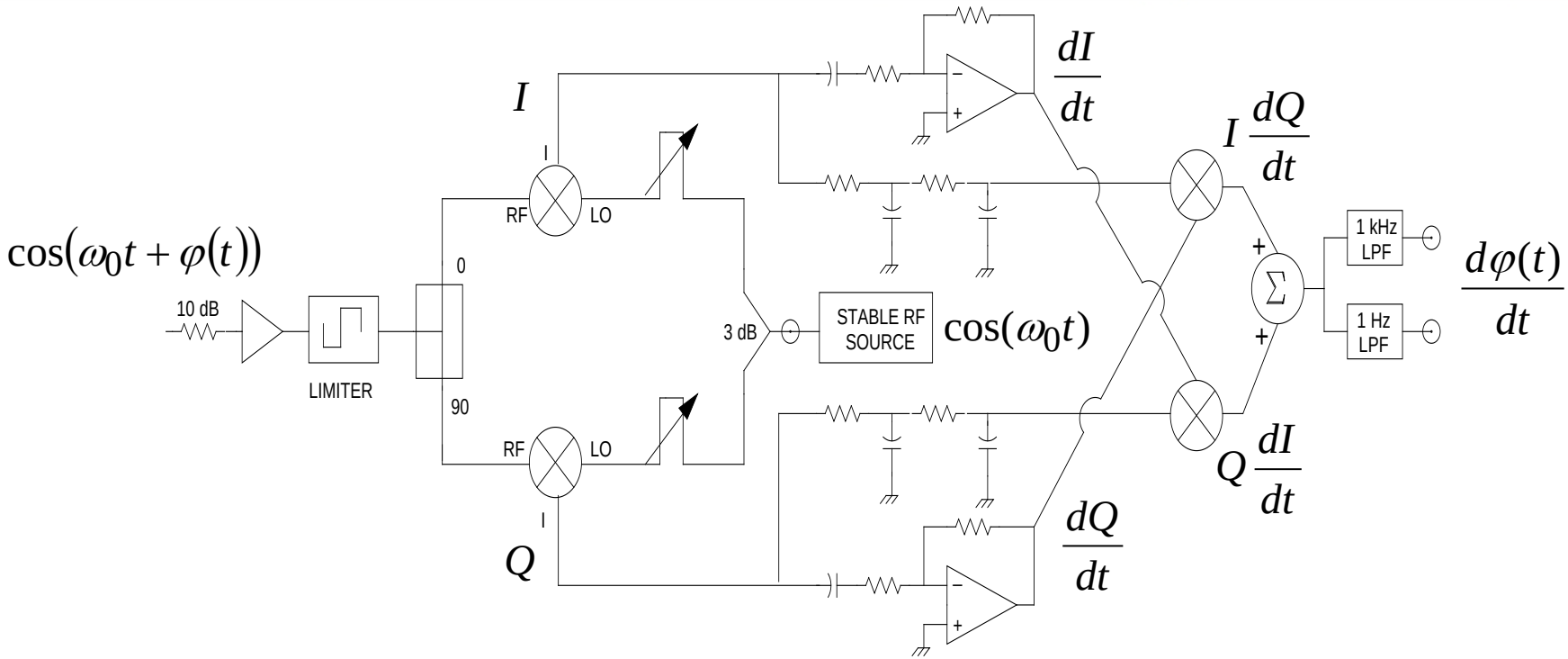

- **A cavity resonance monitor is a system which provides an output signal which is proportional to the difference in frequency between the input signal and a reference source.**
- **They are useful for making accurate microphonic measurements in time domain.**
- **The front end circuitry requires careful tuning to ensure precise I/Q demodulation.**
- **The limiting amplifier is used to stabilize the gain in the system. Without it a separate power measurement would have to be made in order to calibrate the output signals.**

CAVITY RESONANCE MONITOR

Define the input signal to be $\cos(\omega_0 t + \varphi(t))$ and the reference signal be $\cos(\omega_0 t)$.

Passing the input signal through the 90 degree hybrid provides the following:

$$i = \cos(\omega_0 t + \varphi(t)) \quad \text{and} \quad q = \sin(\omega_0 t + \varphi(t))$$

after going through the respective mixers

$$I = \cos(\omega_0 t + \varphi(t))\cos(\omega_0 \mathrm{t}) = \frac{1}{2}\cos(\varphi(\mathrm{t})) + \frac{1}{2}\cos(2\omega_0 t + \varphi(t)) \text{ and}$$

$$Q = \sin(\omega_1 t)\cos(\omega_0 t) = \frac{1}{2}\sin(2\omega_0 t + \varphi(t)) - \frac{1}{2}\sin(\varphi(\mathrm{t}))$$

Going to base band eliminates the sum frequeny terms. To simplify let $\omega_2 = \omega_1 - \omega_0$

$$\frac{dI}{dt} = \frac{1}{2}\sin(\varphi(\mathrm{t}))\frac{d\varphi(\mathrm{t})}{dt} \quad \text{and} \quad \frac{dQ}{dt} = -\frac{1}{2}\cos(\varphi(\mathrm{t}))\frac{d\varphi(\mathrm{t})}{dt}$$

$$I\frac{dQ}{dt} + Q\frac{dI}{dt} = -\cos^2(\varphi(\mathrm{t}))\frac{d\varphi(\mathrm{t})}{dt} - \sin^2(\varphi(\mathrm{t}))\frac{d\varphi(\mathrm{t})}{dt}$$

$$I\frac{dQ}{dt} + Q\frac{dI}{dt} = -\left(\cos^2(\varphi(\mathrm{t})) + \sin^2(\varphi(\mathrm{t}))\right)\frac{d\varphi(\mathrm{t})}{dt} \quad \text{or}$$

$$I\frac{dQ}{dt} + Q\frac{dI}{dt} = \frac{d\varphi(\mathrm{t})}{dt}$$

which is equal to the frequency as a function of time

CAVITY RESONANCE MONITOR

- A cavity resonance monitor is calibrated by using two stable sources with a common reference signal. The frequency on one sources is varied and the difference in output voltage is recorded.
- An alternate method when using a relatively stable cavity is to shift the frequency of the reference sources slightly and measure the subsequent shift in output signal.
- One of the problems with an analog resonance monitor is that mixers are not ideal. At higher frequencies of I and Q, the second harmonic components bleed through to the output giving false frequency content.
- A new DSP based system was developed at Jefferson Lab, which was used to demonstrate such a system. Using a CORDIC algorithm for phase determination and a high resolution analog to digital converter eliminated the need for the difficult to find limiting amplifier; simplifies the calibration process and eliminates gain drifts.
- The phase component of a generator driven, digital LLRF system can also be used to calculate the microphonics.

CRM EXAMPLES

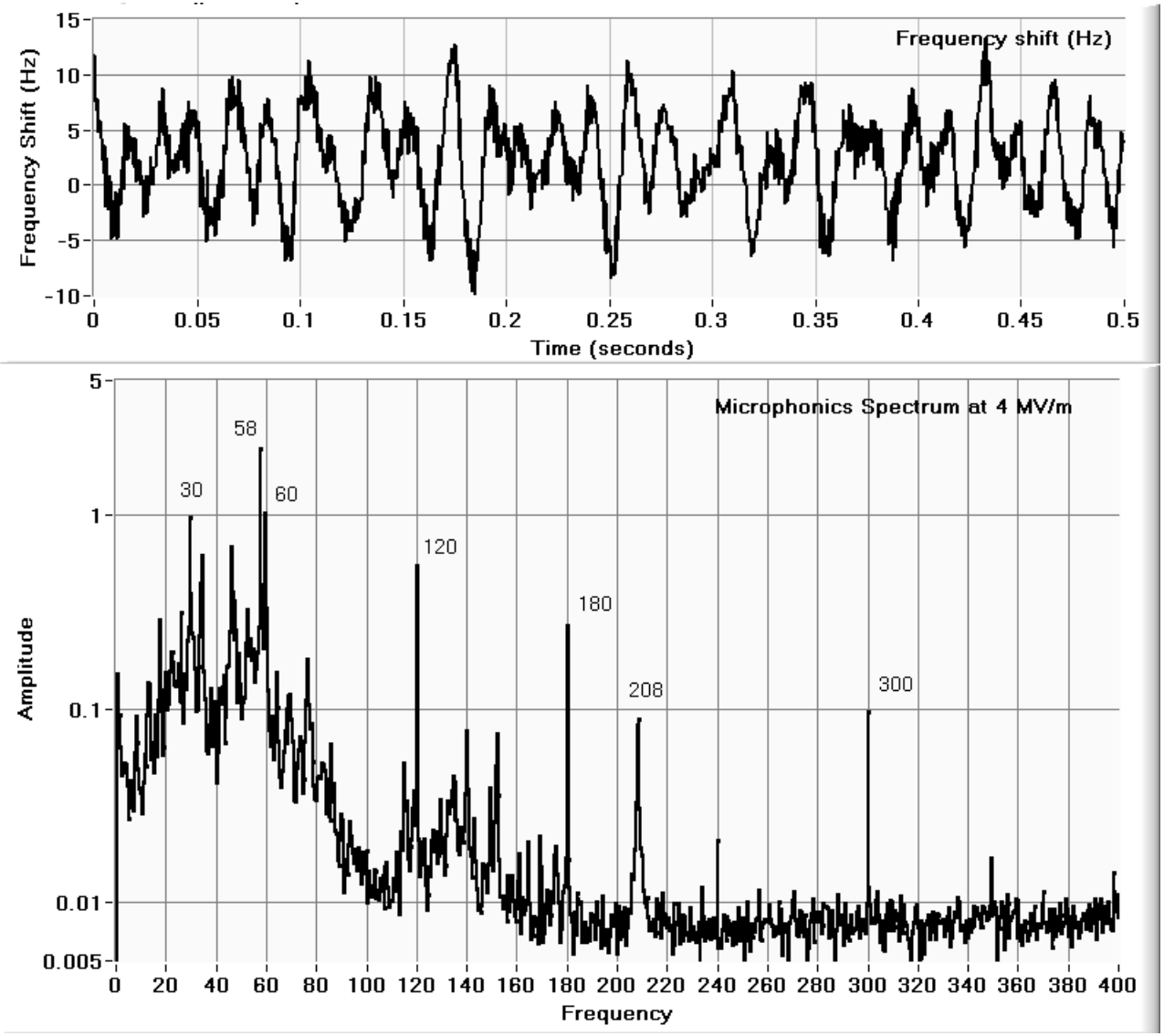

Time domain and frequency domain plots of the background microphonics for a 5-cell CEBAF cavity located in the CEBAF accelerator.

CRM EXAMPLES

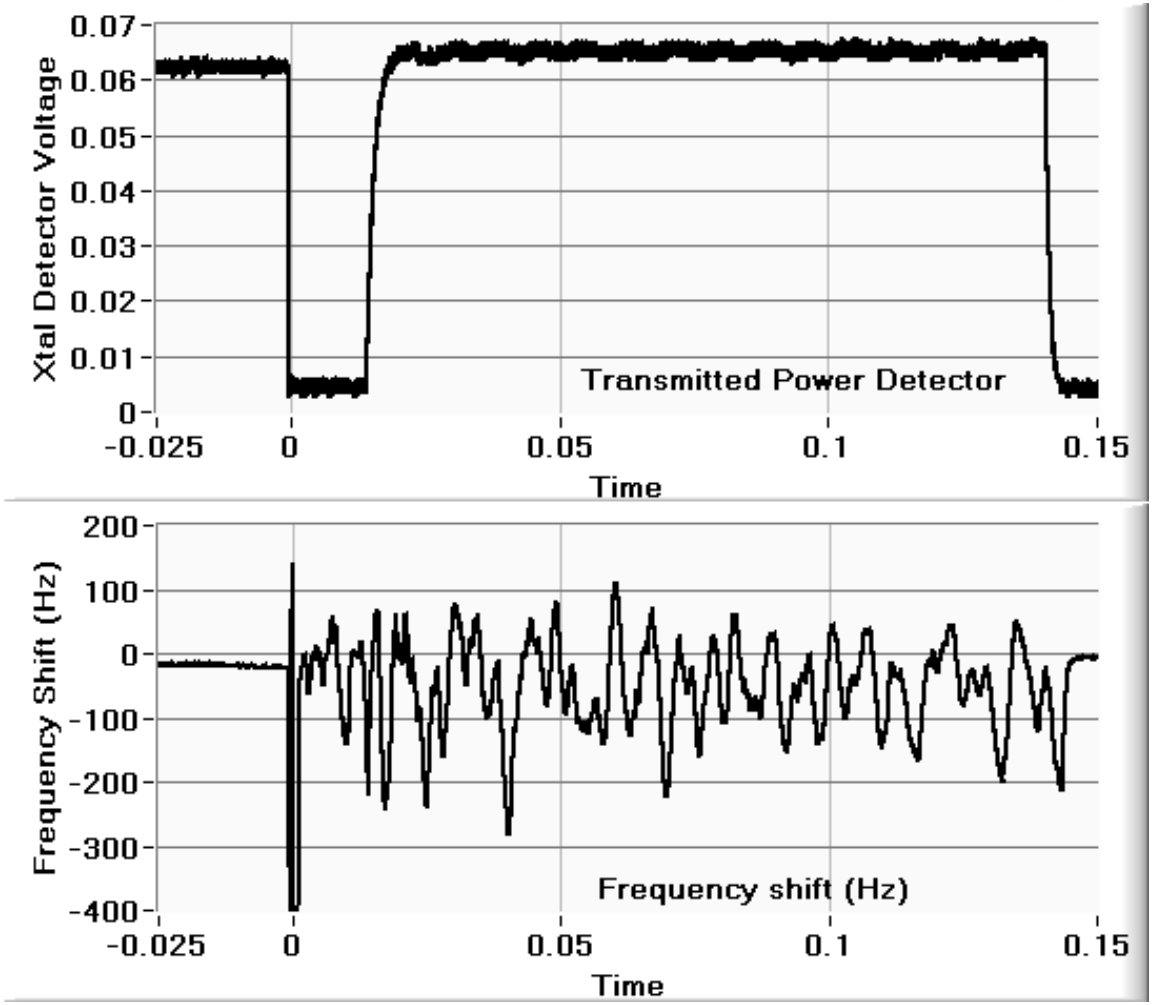

Vibrational modes excited by the sudden loss of cavity gradient due to a window discharge on the cavity side of a cold window in the same cavity as the previous slide.

CRM EXAMPLES

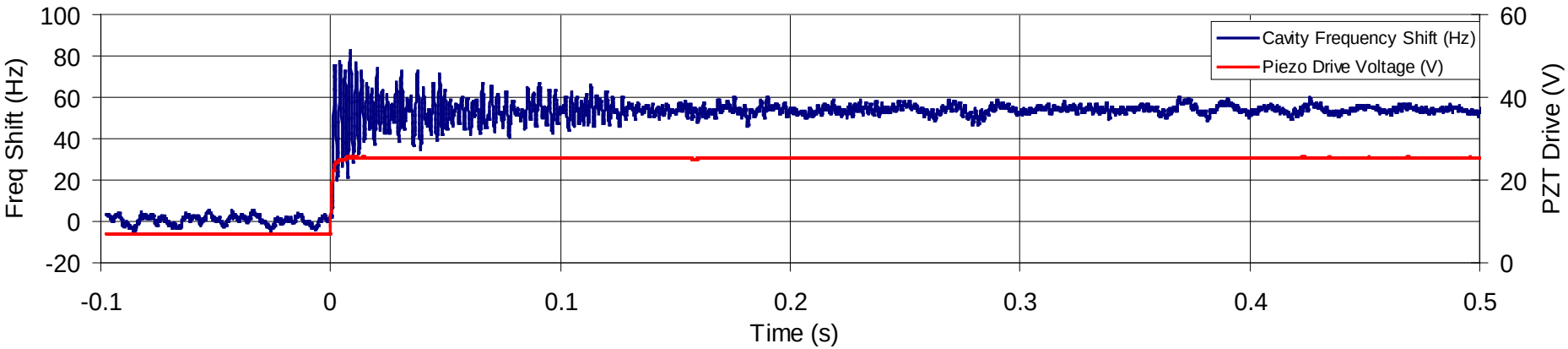

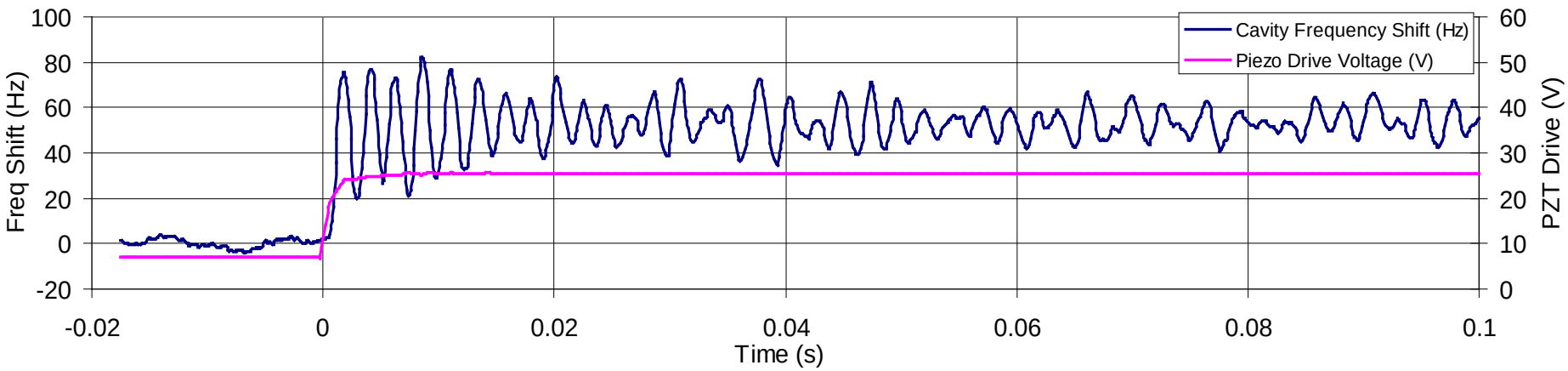

Step response of a cavity excited by a by a 50 Hz step in the piezo tuner controls. The total range of this tuner was 550 Hz.

CABLE CALIBRATIONS

- **Accurate consistent cable calibrations can make or break a test program.**
- **VSWR mismatches in the RF circuits will cause errors to "appear" when the frequency is shifted or the load mismatch changes.**
- **Cable calibrations for cavity testing are complicated by the fact that one or more of the cables are only accessible from one end.**
  - **In a vertical test the incident power cable, the field probe cable, as well as any HOM cables all have sections that are in the helium bath.**
  - **In cryomodule testing the field probe cable and any HOM cables have sections of cable that are within the cryomodule.**
- **When possible cables should be calibrated using signal injection and measurement at the other end using either a source and power meter combination; or a network analyzer.**
- **Cables should be measured at or near the frequency of the test.**
- **The only way to measure the losses of a cable within a cryostat is to do a two way loss measurement either with a calibrated network analyzer or a source, a circulator and a power meter.**

ONE WAY CABLE CALIBRATION

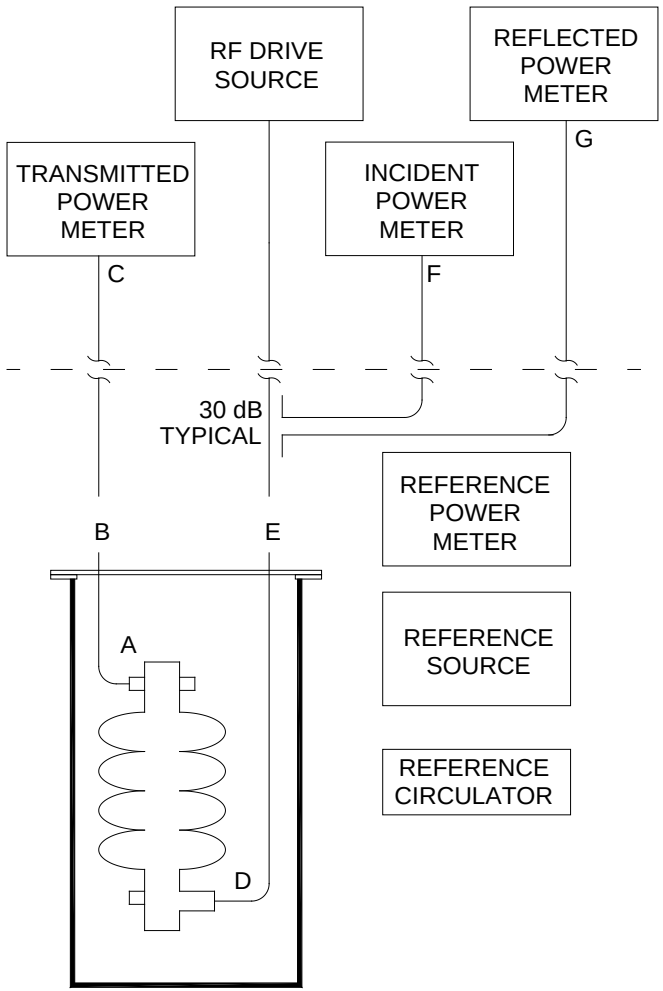

- **To calibrate the cable from point A to point C.**
- **Measure the one way loss of cable B-C.**
  - **Measure the reference source power level with the reference power meter. (P1)**
  - **Connect the reference source to point B of cable B-C.**
  - **Measure the power level with the transmitted power meter. (P2)**
  - **The one way loss is P1-P2 (dB)**
- **Measure the two way return loss of cable A-B**
  - **Connect the reference source to the input terminal of the circulator.**
  - **Connect the reference power meter to the load port on the circulator.**
  - **Record the reading on the reference power meter with the output port of the circulator open.* (P3)**
  - **Connect the output port of the circulator to port B of cable A-B and record the reading on the reference power meter. (P4)**
  - **The two way return loss is P3-P4 (dB)**
- **The cable calibration between for the A-C path is**

$$C_{AC} = (P1-P2) + (P3-P4)/2.$$

TWO WAY CABLE CALIBRATION

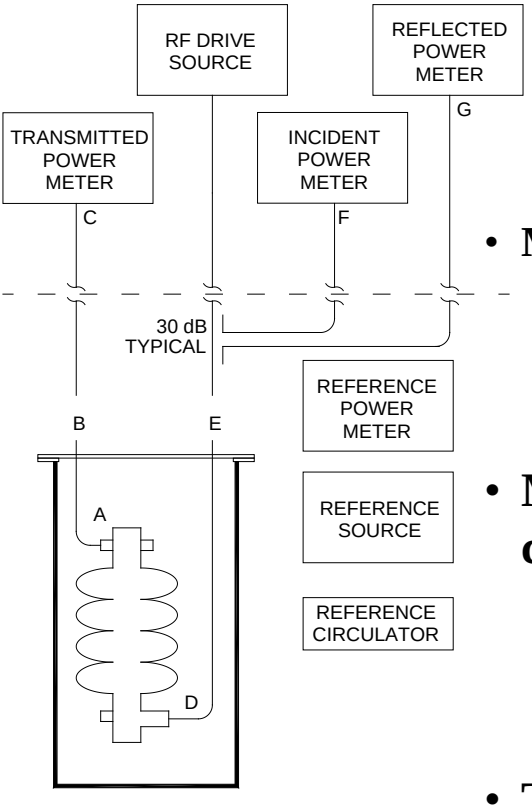

- To calibrate the cable from point D to F and D to G
- Measure the forward power calibration from E to F
  - Connect the reference power meter to point E of the cable from the RF drive source.
  - Turn on the RF drive source and increase the power until the power level on the reference power meter is about 2/3 of the maximum allowed.
  - Record the power levels on the reference meter (P5) and the incident meter (P6)
- Measure the reflected power calibration from E to G
  - Turn off the RF source drive
  - Measure the reference source power level with the reference power meter. (P7)
  - Connect the reference source to point E of the path E-G.
  - Measure the power level with the reflected power meter. (P8)
- Measure the two way loss for the cable D-E with a detuned cavity.
  - Connect the RF drive source to the cavity at point E.
  - Turn on the RF drive source and apply power to the cavity at a frequency about 10 to 20 kHz higher or lower than the cavity's resonant frequency.
  - Measure the incident (P9) and reflected power (P10) with the respective meters.
- The cable calibration are:

  Incident $C_{D-F} = (P5 - P6 + P7 - P8 - P9 + P10)/2$ (dB)

  Reflected $C_{D-G} = (-P5 + P6 + 3*P7 - 3*P8 - P9 + P10)/2$ (dB)

CALIBRATION VERIFICATION

- **Two ways that I use to verify calibration procedures are to:**
- **Calibrate the system using an external cable rather than a cable within the dewar then:**
  - **For field probe power and reflected power inject a known signal level into the external cable and measure the power using the calibrated meter.**
  - **For the forward power connect the external cable to a remote power meter and measure the power using the remote power meter and the system power meter.**
- **In both cases it can be a useful exercise to vary the frequency over a 1 MHz to 2 MHz range and compare the values over the range.**

CALIBRATION VERIFICATION

- **A third way to verify the calibration and look for VSWR problems in the incident power cable is to:**
  - **Use the RF drive source to apply power to either an open test cable that has been calibrated or a detuned cavity.**
  - **Measure the calibrated forward and reflected power. They should be equal.**
  - **Vary the RF frequency by +/- 1MHz in 100 kHz increments.**
- **Variations in the ratio of forward to reflected power indicate a VSWR problem within the cabling system.**

MEASUREMENT OF VSWR INDUCED ERRORS

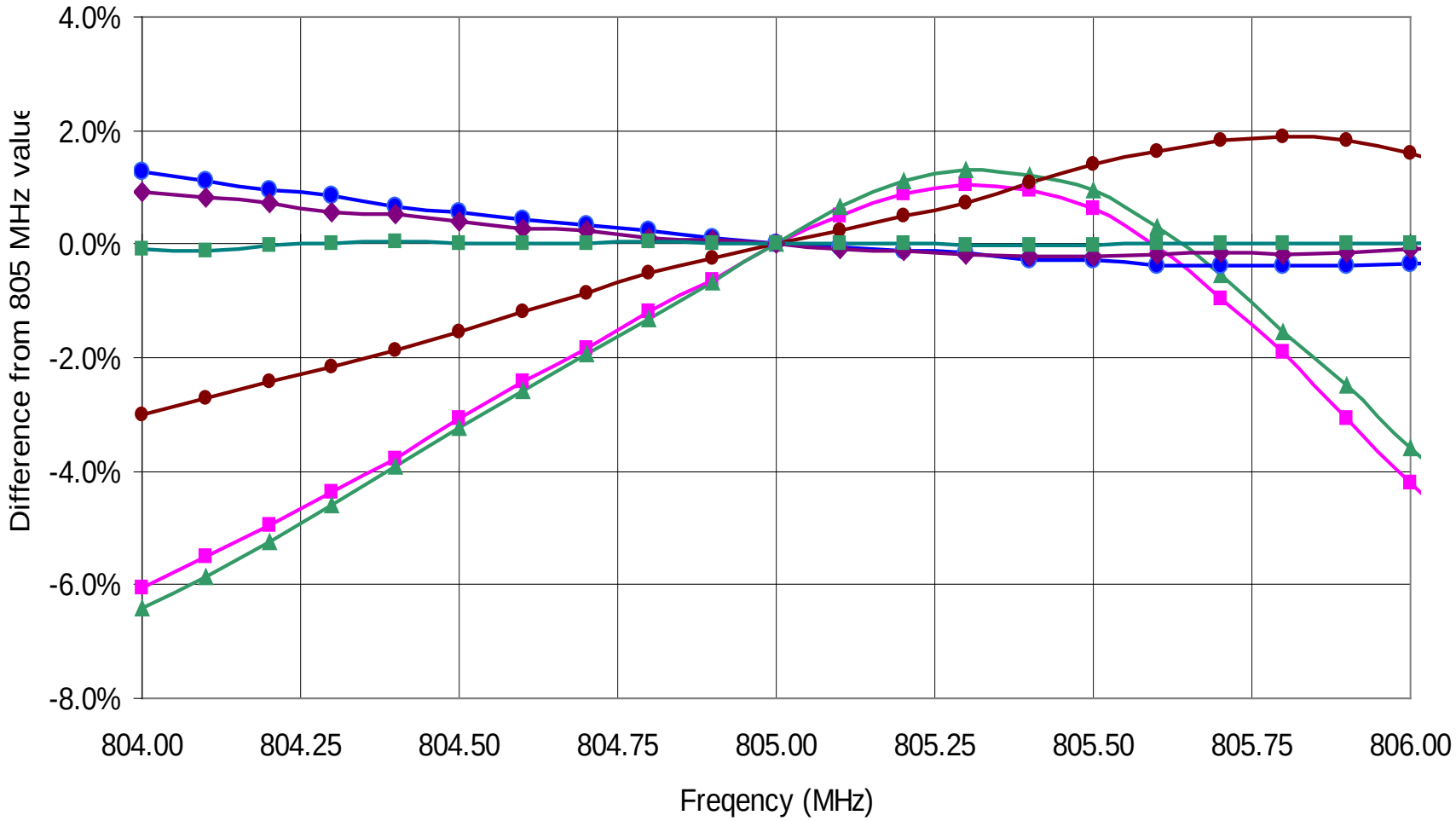

Difference between RF readings calibrated at 805 MHz and those taken at nearby frequencies for several different signal paths. The paths with smaller errors had attenuators distributed throughout the signal path.

VERTICAL AND HORIZONTAL TESTING

- **During production cavities are generally tested using antenna inserted into the fundamental power couplers or one of the beam pipes. The goal is to have the cavity at or near critical coupling for these tests. In this way a minimum amoun of power can be used to reach design gradient. Ideally this means just enough power to overcome the heat losses in the cavity and the power coupled out of the other ports. This has the advantage that the power lost to wall heating can be calculated based on RF measurements.**
- **In most labs these tests are done in vertical test dewars, hence they are commonly called vertical tests.**
- **Cavities in a cryomodule are typically tested using the production couplers that are strongly over coupled. This presents a problem as the errors in lost RF power get excessive when 95% to 99.9% of the incident power is reflected back out of the fundamental power coupler.**
- **During cryomodule tests the RF heat load is measured calorimetrically.**

FUNDAMENTAL TERMS

r/Q	**Shunt Impedance***	**Ω/m**		T	**Operational Temperature**	**K**
G	**Geometry Factor**	**Ω**		r_{resid}	**Residual Surface Resistance**	**Ω**
E	**Electric Field**	**V/m**		Q_0	**Intrinsic Quality Factor**	
L	**Electrical Length**	**m**		Q_{FPC}	**Fundamental Power Coupler Q**	
ω_0	**Cavity Frequency**	**s^{-1}**		Q_{FP}, Q_2	**Field Probe Coupler Q's**	
U	**Stored Energy**	**J**		R_C	**Coupling Impedance**	**Ω/m**
r_S	**Surface Resistance**	**Ω**		I, I_0	**Beam Current**	**A**
T_C	**Critical Temperature**	**K**		I_M	**Matching Current**	**A**
P_X	**RF Power at port X**	**W**		P_{disp}	**Dissipated Power**	**W**
P_{emit}	**Emitted Power**	**W**		τ	**Decay Time**	**s**
R	**Shunt impedance**	**Ω**		β	**Geometric Coupling Factor**	

***Beware that there are different definitions for shunt impedance in use. At Jefferson Lab we use $R = V^2/P$ that includes transit time factor for β = 1.**

FUNDAMENTAL EQUATIONS

$$U = \frac{E^2 L}{(r/Q)\omega_0}$$

$$P = \frac{U\omega_0}{Q} = \frac{E^2 L}{Q(r/Q)}$$

$$Q_0 = G/rS \,||\, Q_{FieldEmissionElectronLoading}$$

$$r_S \approx 10 - 4(\Omega K/GHz2)\frac{f^2}{T}e^{-1.95T_c/T} + r_{resid}$$

$$Q_L = Q_0 \,||\, Q_{FPC} \,||\, Q_{FP} \approx Q_{FPC}$$

$$R_C = Q_L(r/Q)$$

$$I_M = E/R_C$$

$$\frac{1}{Q_L} = \frac{1}{Q_0} + \frac{1}{Q_{FPC}} + \frac{1}{Q_{FP}}$$

$$\beta = \frac{Q_0 - Q_L}{Q_L}$$

FUNDAMENTAL EQUATIONS

Power levels for a strongly over coupled cavity, including beam loading but no microphonics:

delivered to beam LEI

needed from the klystron $$\frac{L(E+IR_C)^2}{4R_C} = \frac{1}{4}\frac{L}{Q_L(r/Q)}(E+IQ_L(r/Q))^2$$

reflected to the circulator $$\frac{L(E-IR_C)^2}{4R_C} = \frac{1}{4}\frac{L}{Q_L(r/Q)}(E-IQ_L(r/Q))^2$$

Time dependent, complex diferential equation where $\vec{K}$ is the incident wave amplitude in $\sqrt{\text{Watts}}$, ω_d is the (time varying) detune angle, and $\omega_f = \omega_0 / 2Q_L$:

$$\left(1\text{-}j\frac{\omega_d}{\omega_f}\right)\vec{E} + \frac{1}{\omega_f}\frac{d\vec{E}}{dt} = 2\vec{K}\sqrt{\frac{R_C}{L}} - R_C\vec{I}$$

One addition to the standards is the equation for the power required for cavity center frequency f_0 detuned by δf and beam current, I_0, off crest by ψ_B :

$$P_{Klystron} = \frac{L}{R_C} * \frac{(\beta+1)}{4\beta} * \left\{(E + I_0 R_C \cos\psi_B)^2 + \left(2Q_L\frac{\delta f}{f_0}E + I_0 R_C \sin\psi_B\right)^2\right\}$$

BASIC EQUATIONS

The following are basic equations relating to coupling factor, β.

$$\beta = \frac{1 - C_\beta \sqrt{P_{reflected} / P_{incident}}}{1 + C_\beta \sqrt{P_{reflected} / P_{incident}}}$$

where C_β is 1 for under coupled and -1 for over coupled

In the case of a strongly over coupled cavity

In the case $\beta >> 1$, $Q_L << Q_0$, or Q_{FP} thus $Q_L \approx Q_{FPC}$

$$Q_L = 2\pi\tau$$

$$E^2 = \frac{4\beta}{(1+\beta)} P_{incident} Q_L \frac{(r/Q)}{L}$$

$$\mathrm{E} \approx \sqrt{4\mathrm{P}_{\mathrm{incident}} \mathrm{Q}_{\mathrm{L}} \frac{(r/Q)}{L}}$$

Although using the forward power to calculate gradient is a reasonable technique, practical experience says that there can easily be as much as 25% difference between the gradient measured using this technique as compared to the that measured using the emitted power technique or using a well calibrated field probe measurement. This difference can be reduced by properly tuning the phase locked loop, for a variable frequency system or the cavity for a fixed frequency system.

EMITTED POWER MEASUREMENT

THE REFERENCE MEASUREMENT FOR STRONGLY OVER COUPLED CAVITIES

Consider what happens when you suddenly remove the incident RF power from a cavity that has the stored energy U. This stored energy leaves the system through dissipation due to wall losses, i.e. Q_0 losses, and as RF power that is emitted from all of the RF ports in the system. Since $Q_L << Q_{FP}$ and $Q_L << Q_0$ in a strongly over coupled superconducting cavity the stored energy can be calculated as:

$$U = \int_{t_0}^{\infty} P_{emitted}(t)dt \approx \int_{t_0}^{\infty} P_{reflected}(t)dt$$

Historically value of U was measured using a gating circuit and an RMS power meter. In a sampled system, such as can be done with a Boonton 4532 pulsed power meter, the stored energy can be approximated by:

$$U \approx \sum_{m}^{N} \left(P_{reflected}\right)_i \Delta t$$

Where m is the sample point where the incident power is removed and N is the total number of sample points. In addition to the errors associated with the power measurement, there are errors in this measurement which are introduced by the sampling system that can be reduced by proper choice of system parameters.

EMITTED POWER MEASUREMENT UNCERTAINTY

The uncertainty in the stored energy is given by the following:

$$\Delta U = U\sqrt{\Delta C_R^2 + \Delta P_{CAL}^2} + \Delta t(N-m)C_R P_{\min} + (\Delta P_{emitted})_m \Delta t + \tau(P_{emitted})_N$$

Where :

ΔC_R is the percentage error in the power reading due to the cable calibration errors and

ΔP_{CAL} is the error in the power meter calibration.

$\Delta t(N-m)C_R P_{\min}$ is the contribution of the power meter noise floor during the integration.

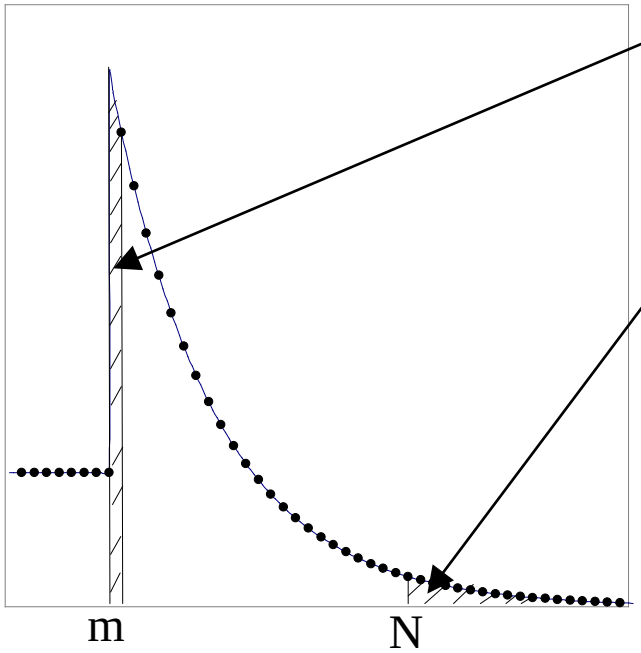

$(\Delta P_{emitted})_m \Delta t$ is due to the jitter in the start of the integration and the peak of the emitted power transient

$\tau(P_{emitted})_N$ is the error introduced because you only summed the series to N and not to ∞

The last two errors can be minimized by sampling the system at a high sample rate compared to the decay time and insuring that that $(m\text{-}N)\Delta t$ is greater than 4 decay time constants.

FIELD PROBE CALIBRATION

Once the stored energy has been determined the gradient can be calculated by using the following:

$$E_{Emitted} = \sqrt{2\pi f_0 * U * \frac{r/Q}{L}}$$

Where the emitted subscript is just an indicator of method used to determine the value. The filed probe coupling factor, Q_{FP} can the be calculated using:

$$Q_{FP} = \frac{E_{Emitted}^2}{\left(P_{Transmitted}\right)_{m-1}} * \frac{L}{r/Q}$$

Where $P_{Transmitted}$ is sampled just prior to removal of the incident power signal. Normally an average of several points just prior to *m* is used for this value.

With good calibrations and proper sample rates the gradient, E, can be measured with an accuracy of 5% to 7% and Q of the field probe to about 10% to 12%.

Qo MEASUREMENTS STRONGLY OVER COUPLED

When making a Q_0 measurement on a cavity that is strongly over coupled the dissipated power must be measured calorimetrically. To do this:

- **The inlet and outlet values on the helium vessel are closed**
- **The rate of rise of the helium pressure is measured under static heat load.**
- **The rate of rise of the helium pressure is measured under a heat load of static plus known resistive power.**
- **The rate of rise of the helium pressure is measured under a heat load of static plus unknown cavity dissipated power.**
- **The following equation is used to calculate the unknown cavity dissipated power.**

$$P_{DISSIPATED} = \left(\frac{\left(\frac{dP}{dt}\right)_{RF-ON} - \left(\frac{dP}{dt}\right)_{STATIC}}{\left(\frac{dP}{dt}\right)_{HEATER-ON} - \left(\frac{dP}{dt}\right)_{STATIC}} \right) P_{HEATER}$$

where $\left(\frac{dP}{dt}\right)$ is the rate of rise of the pressure under the different conditions.

QO MEASUREEMENTS CW WITH BETA NEAR 1

When making a CW measurement of Q_0 on a cavity that is near critical coupling the dissipated power is calculated as the forward power minus the sum RF power leaving the system either as reflected power as it exits the field probe port, HOM port, etc. The error stack up is given as the following:

$$\frac{\Delta P_{Disp}}{P_{Disp}} = \sqrt{\frac{(\Delta P_{incident})^2 + (\Delta P_{reflected})^2 + (\Delta P_{transmitted})^2}{(P_{incident} - P_{transmitted} - P_{reflected})^2}}$$

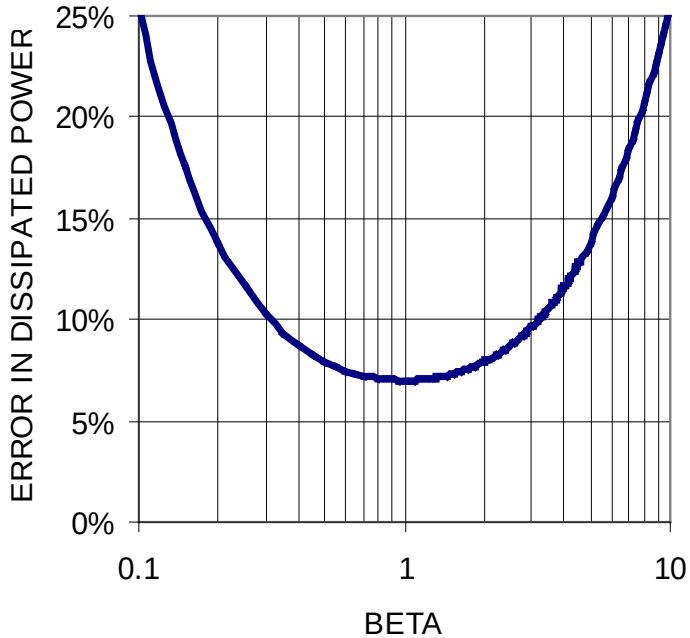

As was stated earlier, β is a measure of the magnitude of the reflected power as compared to incident power. At β = 1 the error in the dissipated power, as measured using the RF signals, is minimized and approximately the value of the error in the incident power. As β gets much above 8 and much below 0.15 the errors in dissipated power, and subsequently calculated values of Q_0 start to become excessive.

Q_0 AND E_{ACC} MEASUREEMENTS WITH BETA NEAR 1 DECAY MEASUREMENT

- **Measure the forward and reflected power just prior to turning off the RF so that one may calculate the reflection coefficient.**
- **Use the forward, reflected and field probe power just prior to turning off the RF in order to calculate the dissipated (P_{Disp}) power.**
- **Determine if the cavity is overcoupled or undercoupled by looking at the reflected power pulse shape ($cp = \pm 1$).**
- **Measure decay time of the emitted power so that one can calculate the loaded-Q**
- **Using this data calculate Q_0 for the cavity.**

$$Q_0 = \left(1 + \frac{1 + cp\sqrt{P_{ref}/P_{fwd}}}{1 - cp\sqrt{P_{ref}/P_{fwd}}}\left(1 + \frac{P_{FP}}{P_{Disp}}\right) + \frac{P_{FP}}{P_{Disp}}\right)Q_L$$

This equation becomes more complicated if there are more than 2 ports on the cavity

$$E_{acc} = \sqrt{Q_0 P_{Disp} \frac{(r/Q)}{L}}$$

$$Q_{FP} = \frac{E_{acc}^2 L}{(r/Q)}$$

Q_0 AND E_{ACC} MEASUREMENTS WITH BETA NEAR 1 CW MEASUREMENT

- **Using the field probe-Q calculated during the decay measurement one can calculate the gradient.**
- **Using the difference between the forward power and the sum of the reflected and transmitted power calculate the dissipated power.**
- **Use the Gradient and the dissipated power to calculate Q_0**

$$E = \sqrt{\frac{Q_{FP} P_{FP} (r/Q)}{L}}$$

$$Q_0 = \frac{E^2 L}{P_{Disp} (r/Q)}$$

Note: The errors in E and Q_0 ARE be higher in a CW measurement.

GRADIENT MEASUREMENTS WITH BETA NEAR 1

The typical gradient errors are on the order of 6% to 8% with the same constraints. This assumes that:

- **The errors in the power* measurements are less than 7.5%**
- **The error in tau is less than 3%.**
- **The system has as a low VSWR**

***Note that Power measurement errors include nonlinearity of the power meters (typically 1% to 2%) as well as absolute accuracy of the instruments (typically 3% to 5%) and the calibration errors (typically an added 3% to 5%).**

Thus for a 40 MV/m accelerating gradient measurement the actual value is probably between 37 and 43 MV/m.

REFLECTED POWER WAVEFORMS

When operating cavities near critical coupling and preparing to make a decay measurement, one of the items that must be determined is the cavity is over coupled or under coupled. Typically a crystal detector is placed on the reflected power signal and the waveform is observed under pulsed conditions.

Signal goes to zero if properly tuned

Initial peak is equal to the reflected power level when cavity detuned in all cases

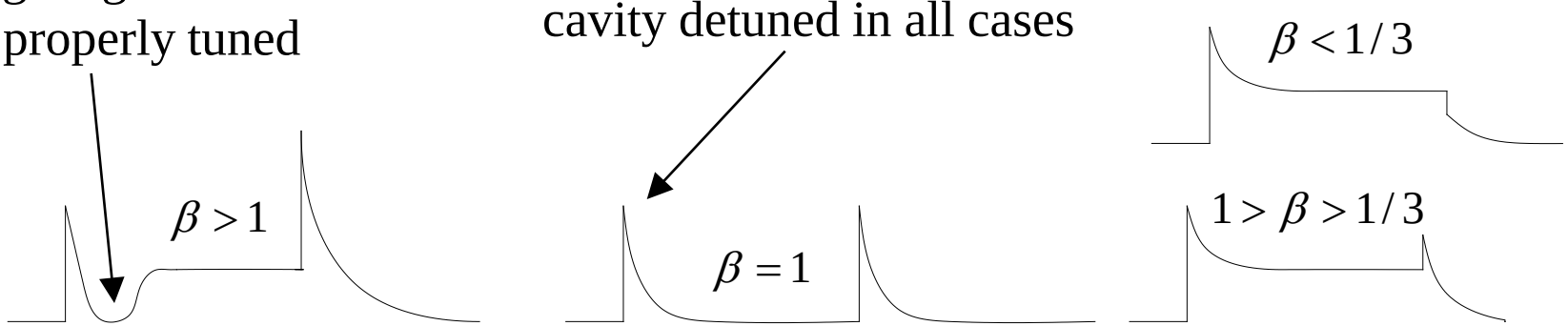

Over Coupled | **Critically Coupled Reflected Power** | **Under Coupled**

Field Probe | **Forward Power**

CABLE BREAKDOWN IN LOW PRESSURE HELIUM

- When vertical testing the incident power cables must pass through the low pressure helium gas in order to get to the fundamental power coupler.
- Both the mating connector space as well as the cable back shell space are susceptible to this phenomena.
- Glow discharges have been produced in un-terminated N-connectors at 20 Torr using as little as 10 Watts.
- Even connectors in 2 K liquid helium have been known to break down at power levels on the order of 150 W, full reflected at the cavity.

CABLE BREAKDOWN IN LOW PRESSURE HELIUM

- Once a breakdown is initiated it will be sustained by the forward power even at levels down to 10 W.
- Such events appear to be Q-switching within the cavity. The gradient will be reduced and the measured Qo will be reduced substantially.
- These discharges destroy connectors and have the potential to cause failures in vacuum feedthroughs.
- To put things in perspective
  - The Paschen minimum is the product of the pressure and distance required for the minimum voltage breakdown in gas.
  - For helium this value is 4 Torr-cm.
  - In other words at 20 Torr the electrode spacing for a minimum voltage breakdown is 2 mm.
- The theory on breakdown in liquid is that:
  - A few watts of heat is produced in the connector, possibly through thermal conduction down the, insulated, center conductor, from the antenna within the cavity, or in the connector pin itself.
  - The liquid helium flashes to gas within the connector
  - A breakdown occurs in the newly produced low pressure gas volume.

CABLE BREAKDOWN IN LOW PRESSURE HELIUM

- **To determine if you have a cable discharge, while it is occurring:**
  - **Detune the frequency of the LLRF system far enough to lose lock in the cavity.**
  - **Measure the forward and reflected power.**
  - **Subtract the calibrated forward power from the calibrated reflected power to calculate the lost power.**
  - **If any significant power is being lost you probably have a glow discharge in the connector.**
- **On occasion connectors damaged from mechanism this will exihibit this anomalous loss permanently at all power levels.**
- **Therefore one should turn off the RF power; and repeat the steps above to ensure that the lost power is consistent with the error associated with the measurement.**

CABLE BREAKDOWN IN LOW PRESSURE HELIUM

So what is an engineer to do?

- NEVER make a high power RF connection in low pressure helium gas.
- We use silicon dioxide dielectric, stainless steel jacketed, cables manufactured by Times Microwave which have the outer conductor welded into a Conflat flange. This ensures that the high power connections are only made in liquid helium.
- Vent all connector volumes to the helium bath to improve the heat conduction out of the space, especially connector backshells.
- Fill all potential spaces with insulating material. In theory this should work but we have only had limited success at 300 W.
- One option that we have pursued but not fully implemented is to pressurize the cable with helium gas including the connection to the vacuum feed through at the coupler antenna.
- Best of all critically couple the cavities by carefully adjusting the input antenna or by using a variable coupler so that you do not have to use more than 150 W at the cavity.

EXAMPLE OF PRESSURIZED CABLE SOLUTION

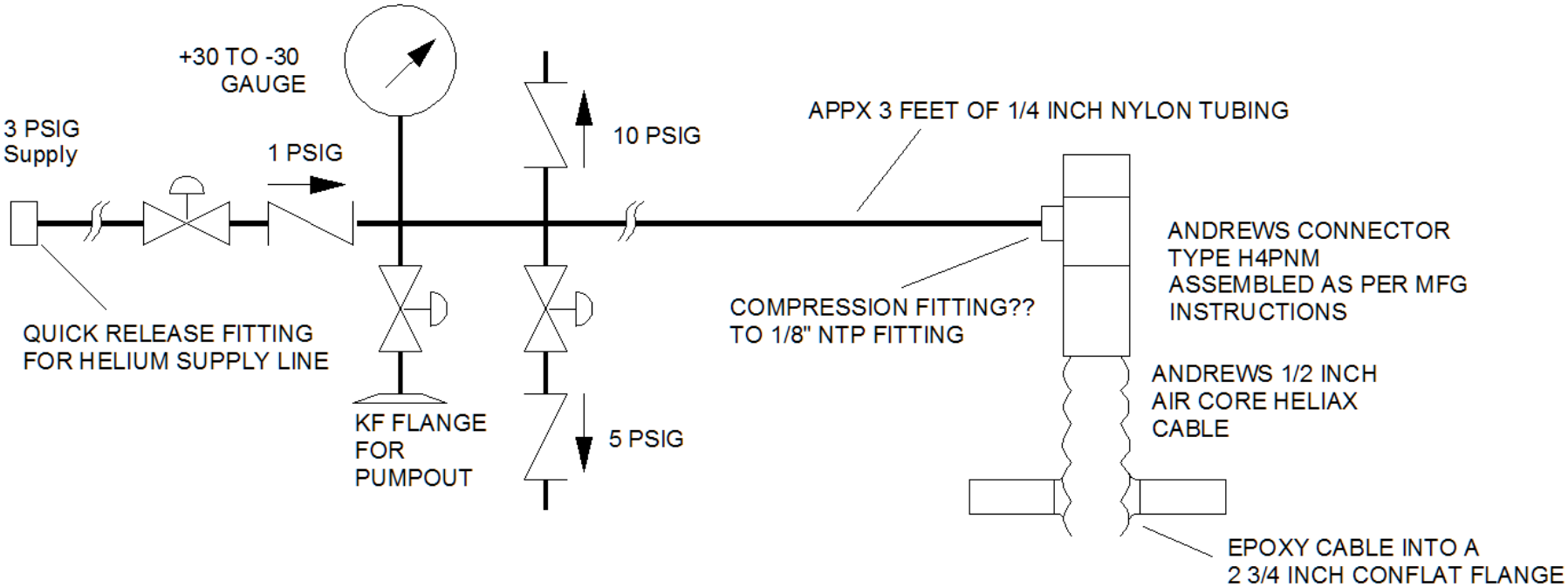

HELIUM MANIFOLD AND WARM END DETAILS

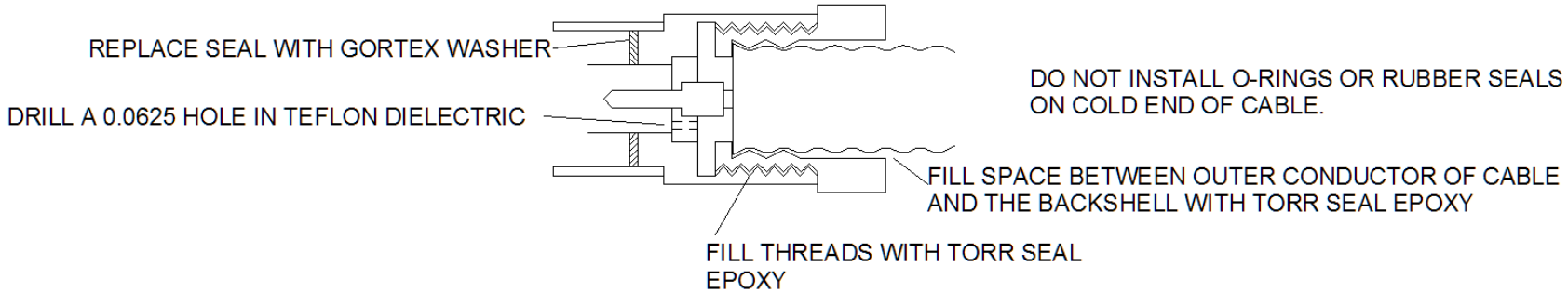

COLD END CONNECTOR DETAILS

EXAMPLE OF PRESSURIZED CABLE SOLUTION

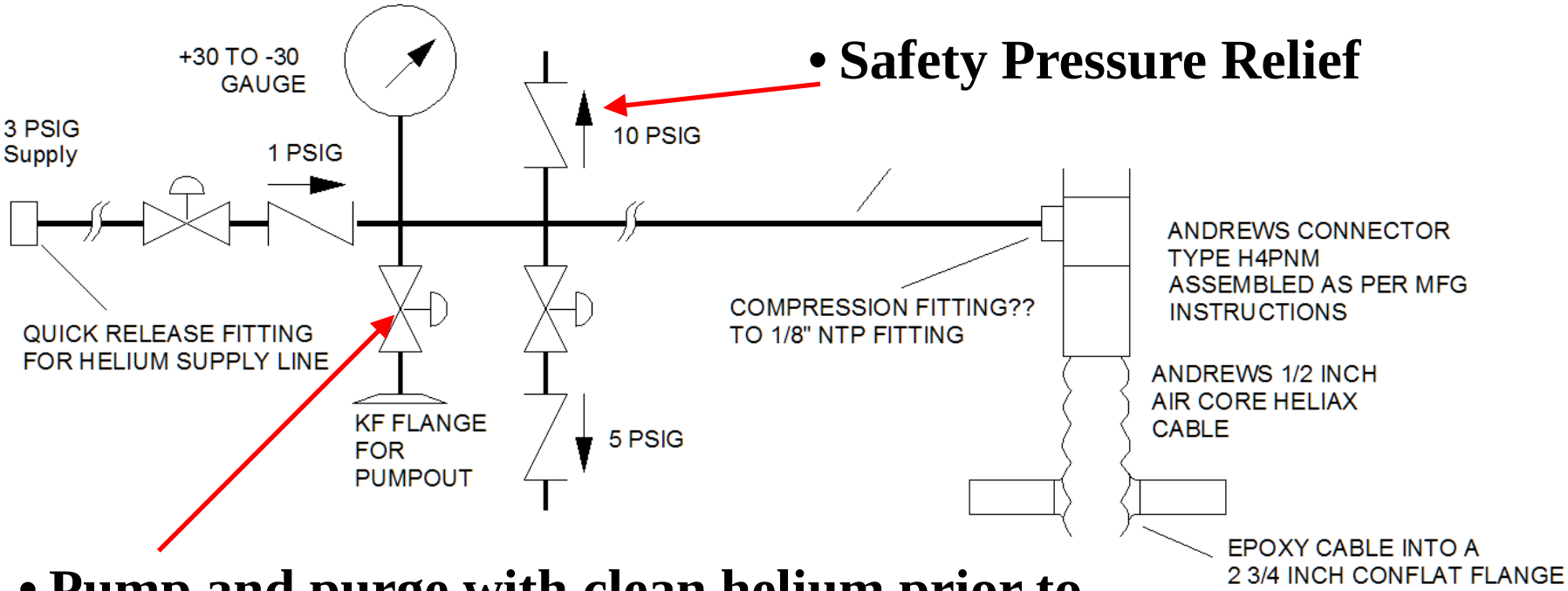

- **Safety Pressure Relief**
- **Pump and purge with clean helium prior to cooldown.**
  - **Prevents frozen air in cable**
  - **Prevents contamination within dewar if lower seals leak during operation.**

EXAMPLE OF PRESSURIZED CABLE SOLUTION

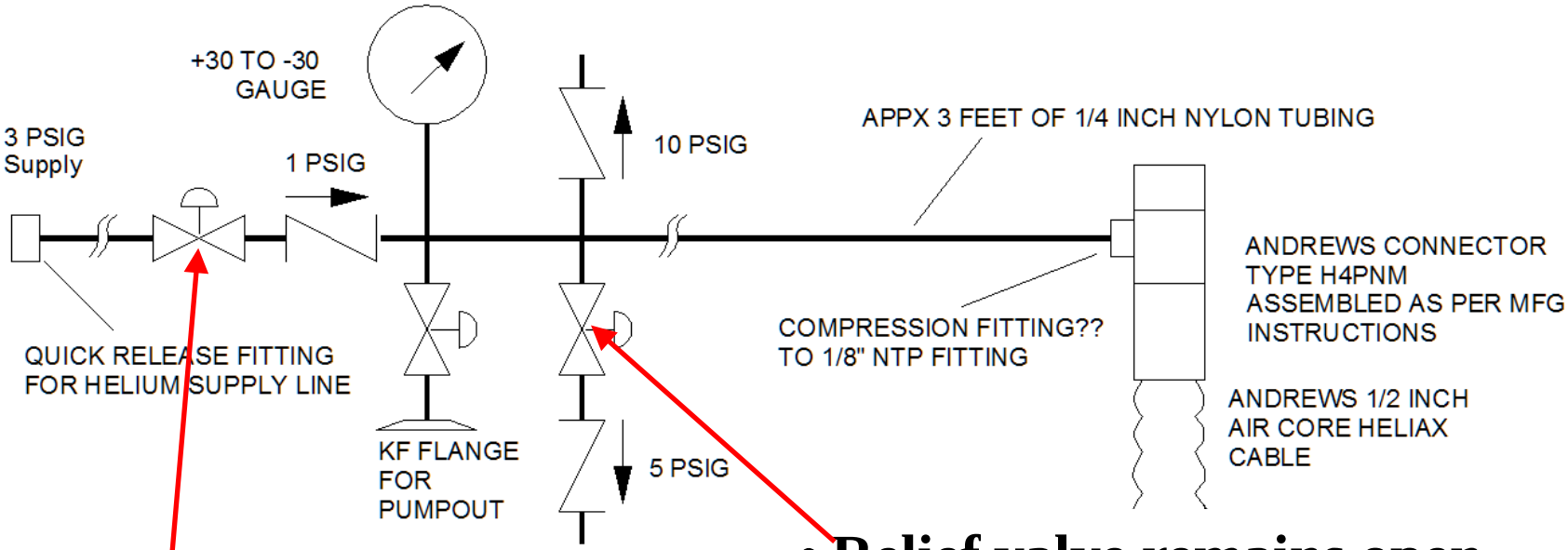

A
FLANGE

- **Inlet valve remains open when dewar is cold.**
  - **Maintains pressure in cable when helium gas gets cold or turns to liquid**

- **Relief valve remains open when dewar is cold and during warmup.**
  - **Relieves pressure when RF heat in cable causes gas to warm up or liquid to turn to gas**
  - **Relieves pressure during warmup.**

CONFUSING DATA

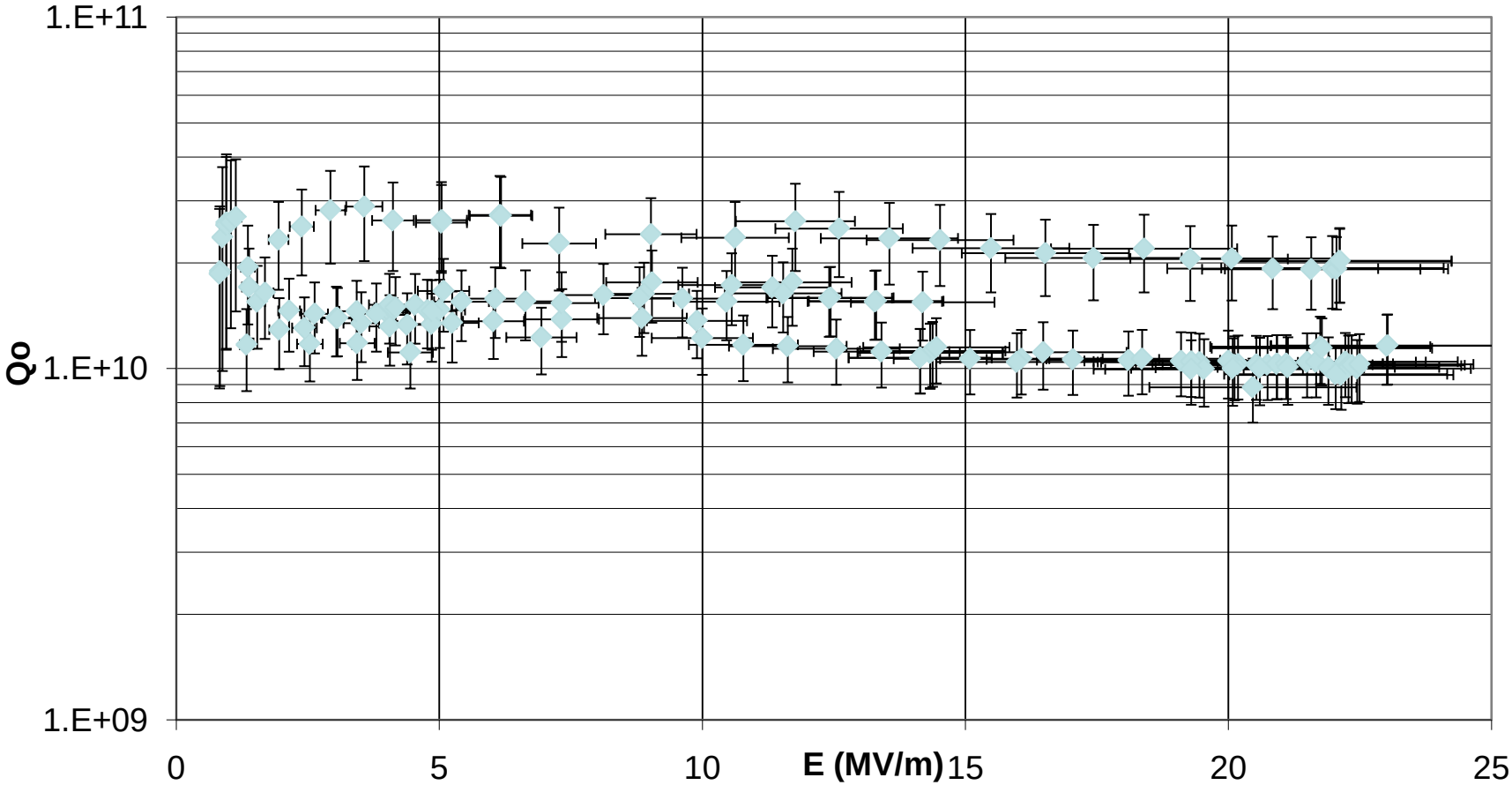

- **Data varied substantially depending on:**
  - **Incident power used for incident power cable calibration**
  - **Time at higher power levels**
  - **Delay between reducing the power and making a measurement**

SiO_2 CABLE LOSS CHANGES*

- One NEW phenomena that was "discovered" last summer was that the $Si0_2$ cable losses were not stable after the application of even a moderate amount of RF power, i.e. tens of Watts.
- This shows up as a change in the forward and reflected power over time a constant RF power.
- It introduces significant error into the measurements of gradient and Q_0 of the cavities.
- When testing cavities changes in both Q_0 and E shortly after turning the RF on at higher power levels may be an indicator of the problem.

*NOTE: These are not Times Microwave cables, which have yet to be tested

INITIAL SYMPTOMS Q VS E DATA

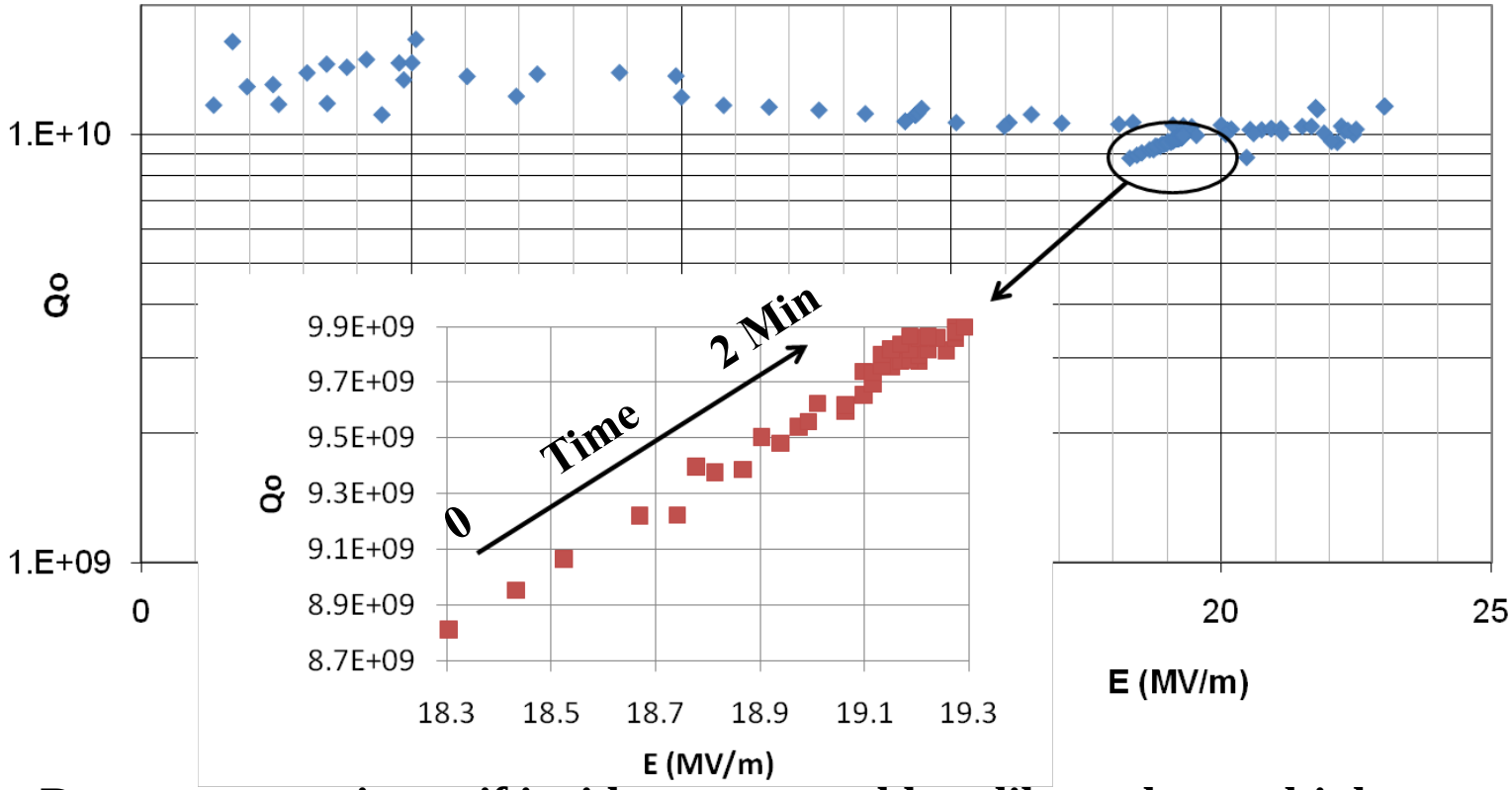

- **Data more consistent if incident power cable calibrated at multiple power levels**
- **Data shown in inset graph taken by**
  - **Calibrating the incident power cable at high power**
  - **Turning off the RF for 3 minutes**
  - **Turning the power back on at about 37 W**
  - **Recording the data continuously for 2 minutes**

SiO_2 CABLE LOSS CHANGES

- It can easily be observed by
  - Detuning the cavity
  - Turing the RF power off for several minutes
  - Turning the RF Power on and observing the forward, reflected and "lost" power over a 1 to 5 minute time frame.
- Some variation in the Incident and Reflected power is expected as the amplifiers may have a transient in their gain due to thermal issues.
- The "lost" power should remain constant as it is the calibrated difference between the Incident and Reflected Power.
- The amount of change in the "lost" power indicates the magnitude of the introduced error.

SiO_2 CABLE LOSS CHANGES

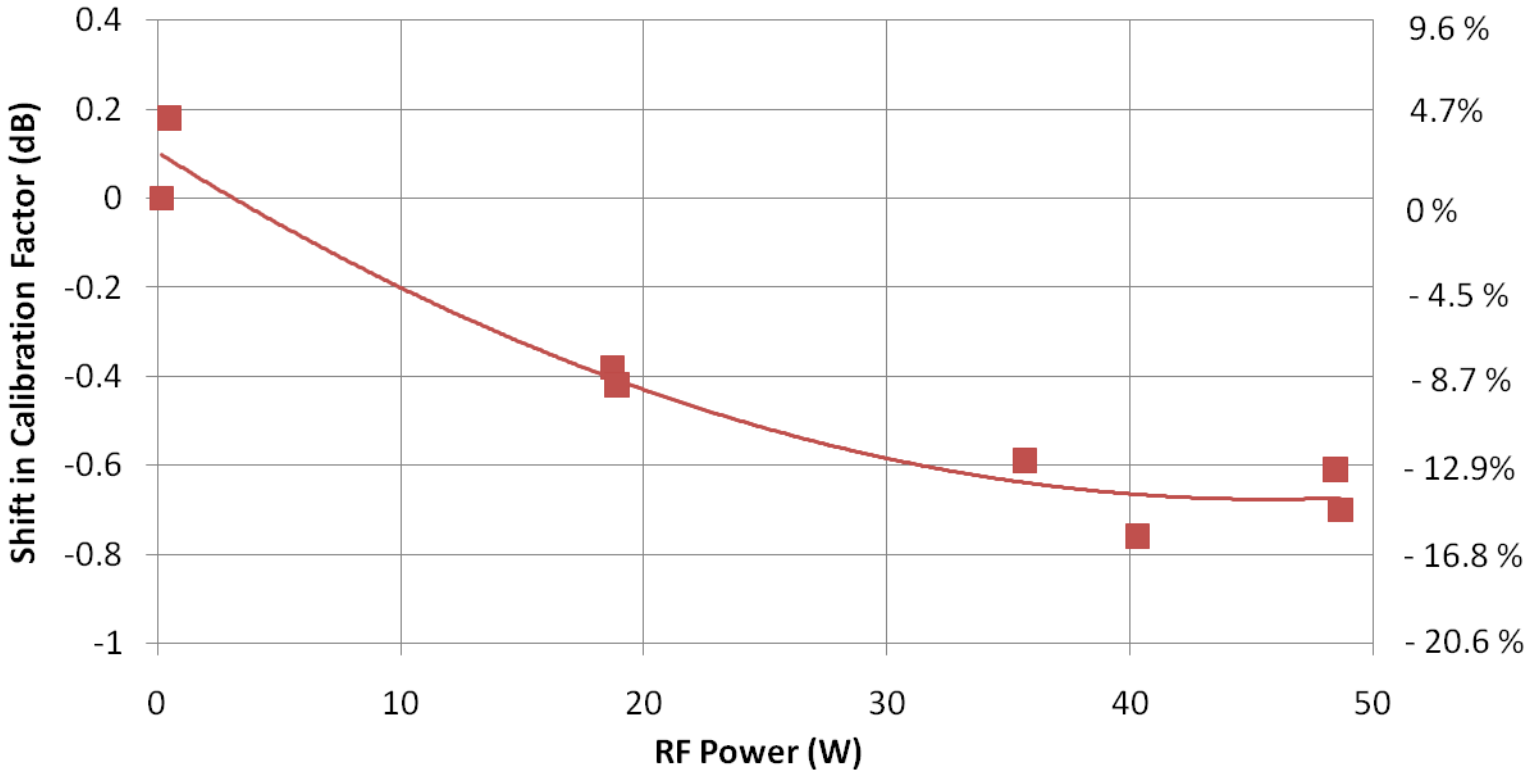

Change in SiO2 Cable calibration as a function of forward Power

- **Data taken with dewar at 2K**
- **Power applied and allowed to stabilize for a few minutes prior to taking the calibration data.**

GRAPHS OF GOOD AND ANOMALOUS CABLE COOL DOWNS

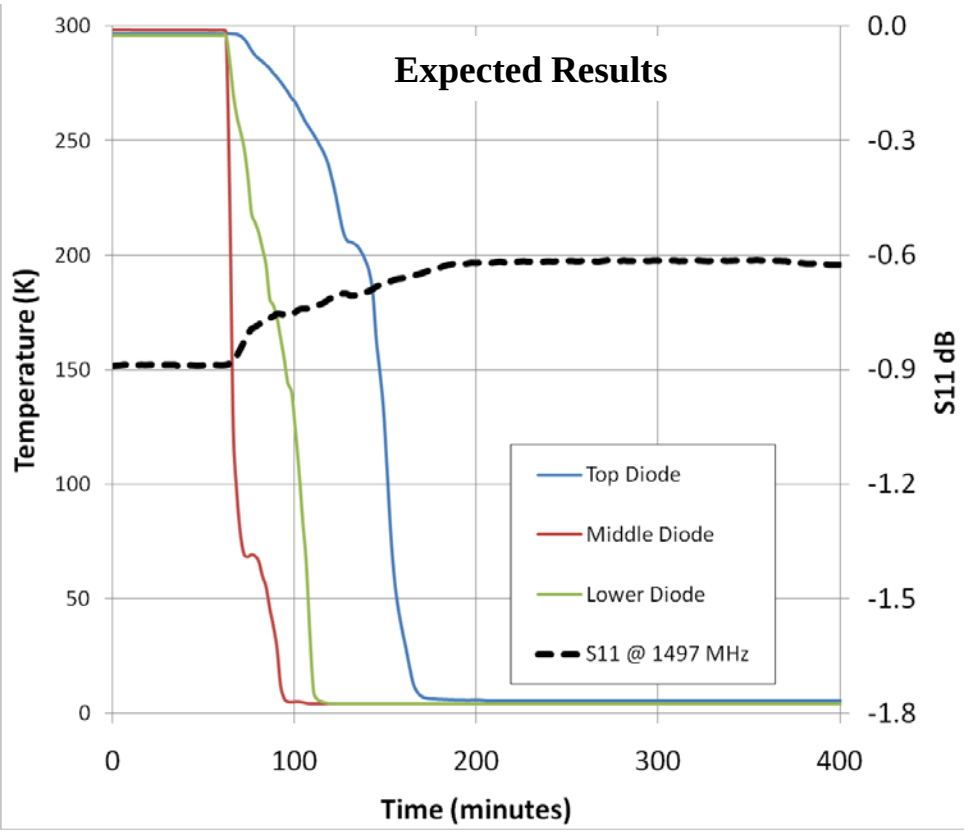

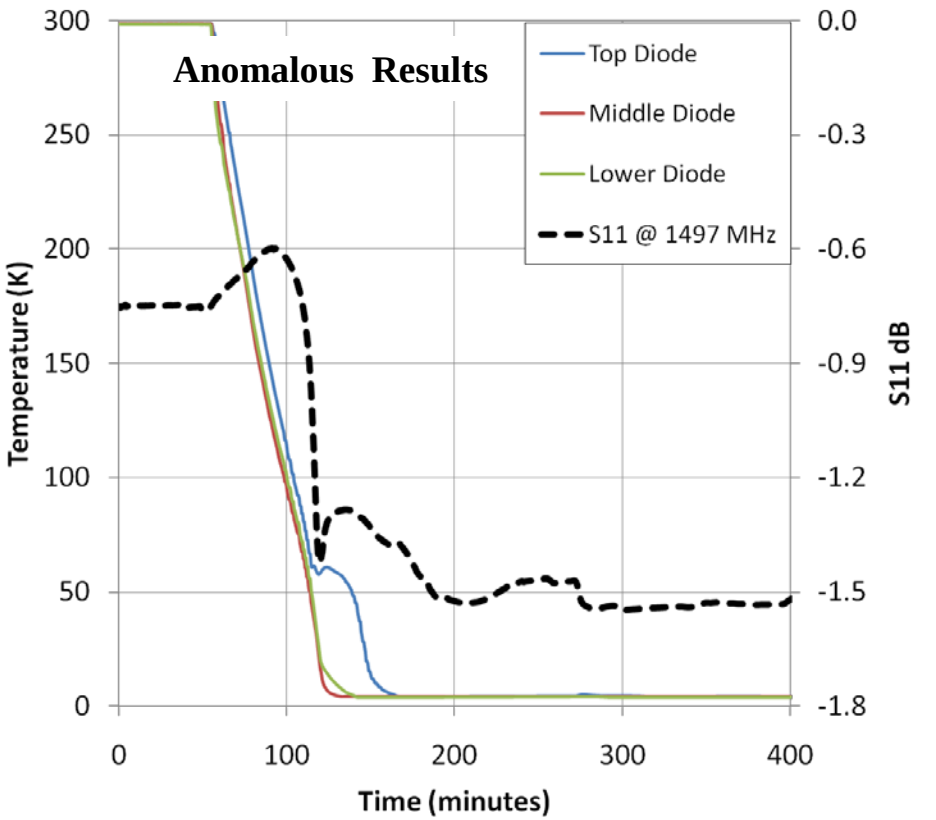

- **S11 of unterminated cable measured during "standard" cool down process**
- **Thermometry was installed in a channel mounted on the wall of the dewar, thus the actual temperature of the cable is only loosely correlated to the temperature readings.**
- **Swept S11 data was recorded periodically during the cool down process**

GRAPHS OF GOOD AND ANOMALOUS CABLE COOL DOWNS

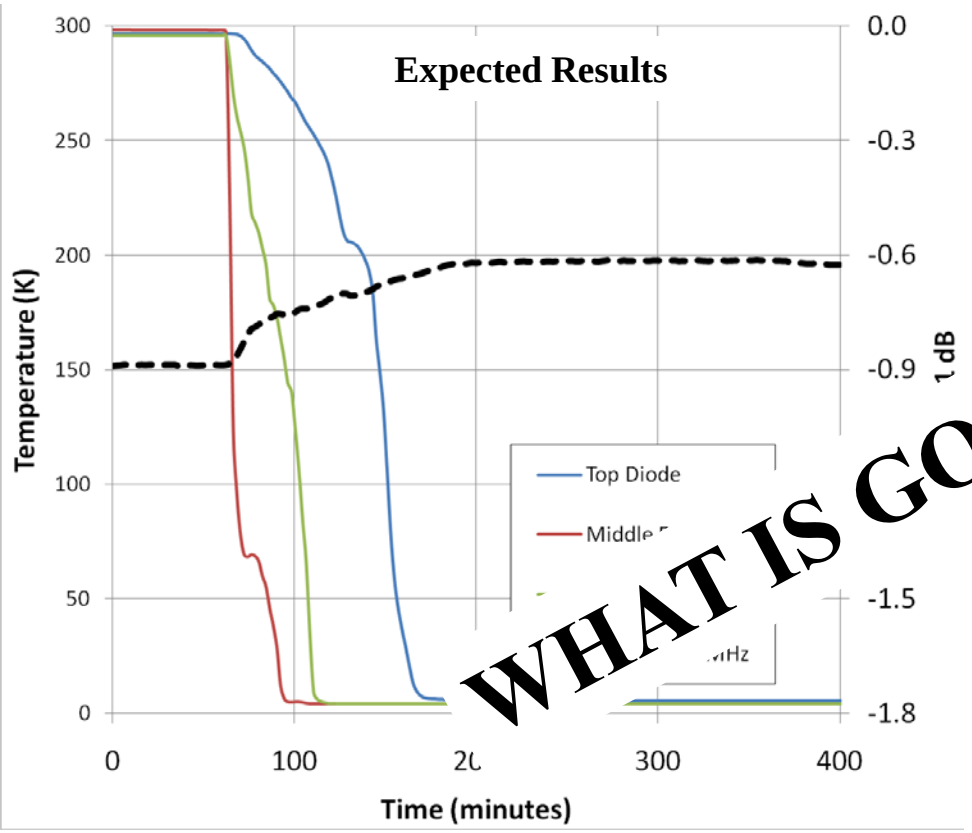

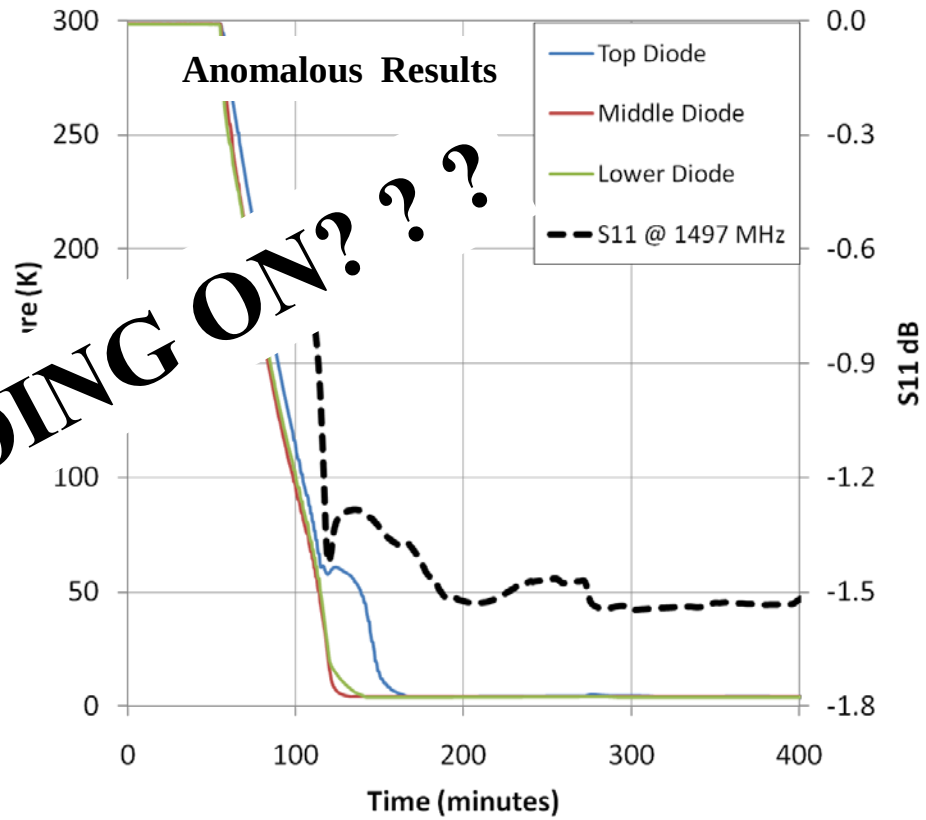

WHAT IS GOING ON? ? ?

- **S11 of unterminated cable measured during "standard" cool down process**
- **Thermometry was installed in a channel mounted on the wall of the dewar, thus the actual temperature of the cable is only loosely correlated to the temperature readings.**
- **Swept S11 data was recorded periodically during the cool down process**

DIRECTIONAL COUPLERS ARE NOT CREATED EQUAL

- **Frequently directional couplers are used to make measurements for which the load is not matched at 50 Ohms**
- **One example is the final step on the incident and reflected power calibrations where the reflected power is some 3 to 6 dB below the forward power**
- **Another example is when measuring a cavity that is not quite matched, i.e. $\beta \neq 1$.**

MEASUREMENT TECHNIQUES

- **Perform S21 measurements of different ports with all of the other ports terminated at 50 Ohms or with a broad band miss-matched load.**
- **One critical item is that there is a significant error introduced due to S11 of the output port on the network analyzer. To remedy this one must insert a circulator between port 1 and the unit under test.**
- **A good broad band miss match is an unterminated attenuator.**

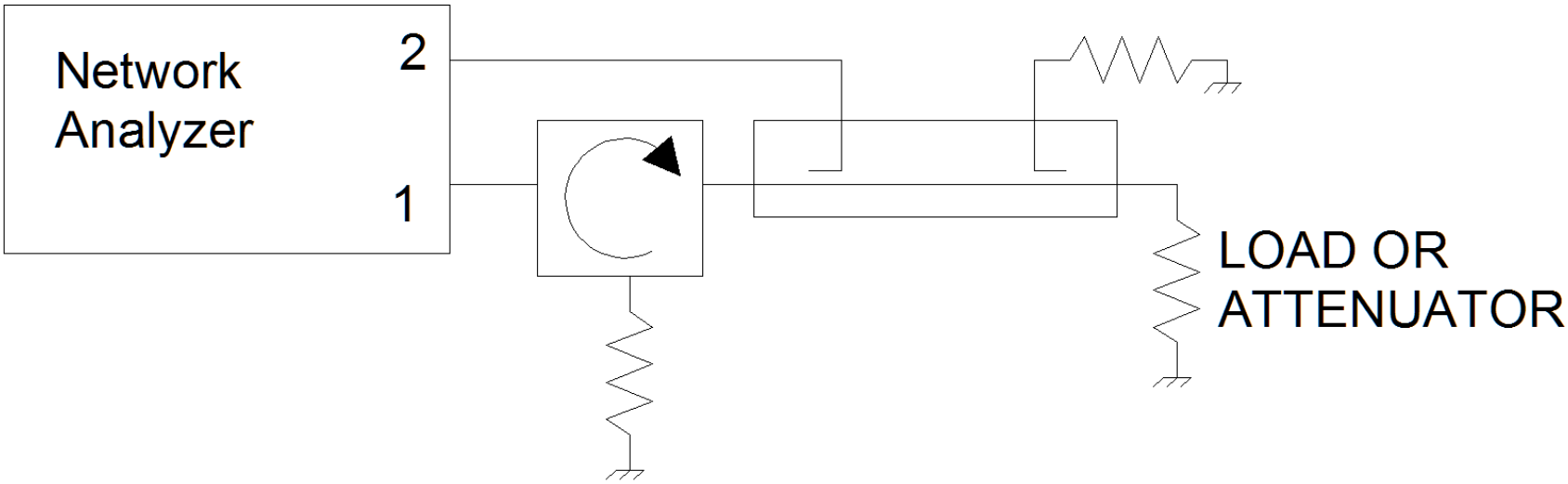

NARDA 20 dB COUPLER

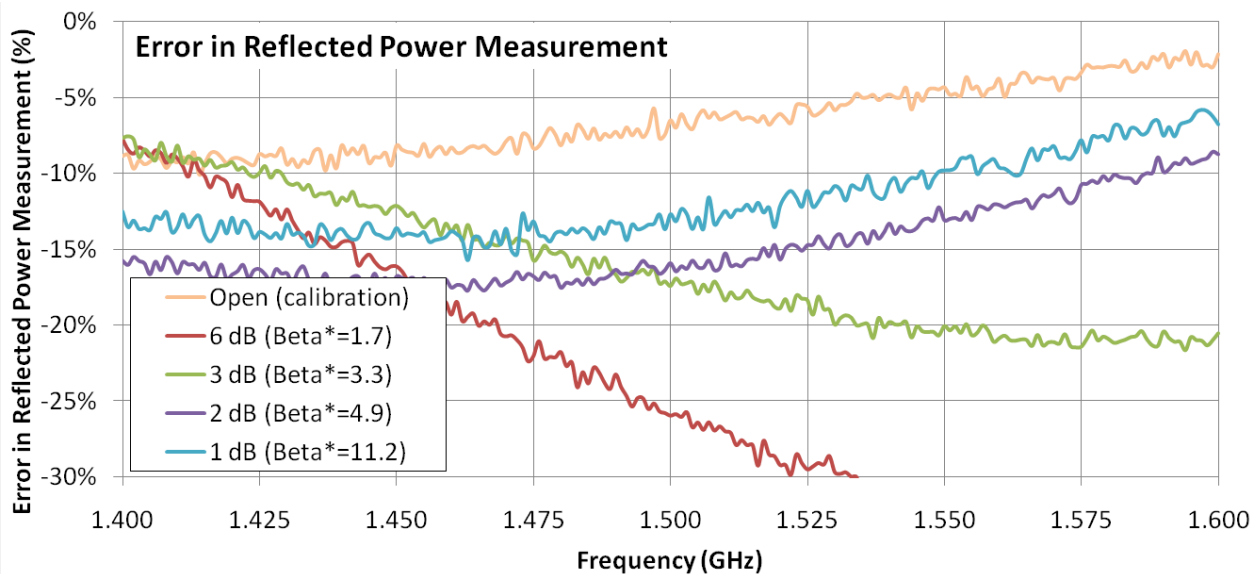

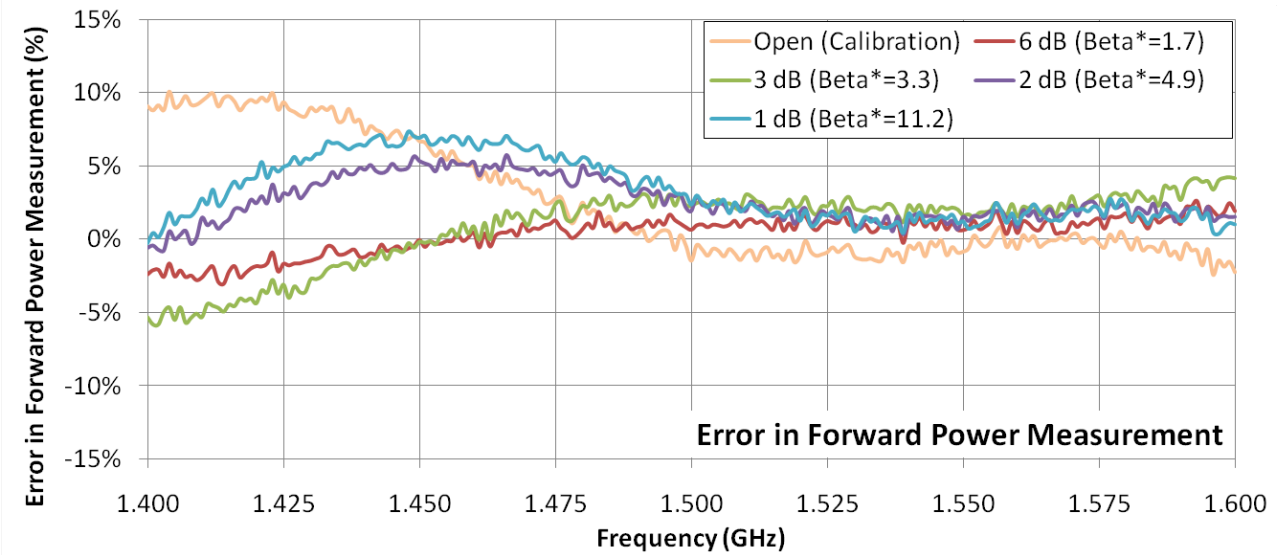

Error in power measurement with different loads on the output of the directional coupler (i.e. different beta*) Narda 3320 Serial 73091

CT MICROWAVE 30 dB COUPLER

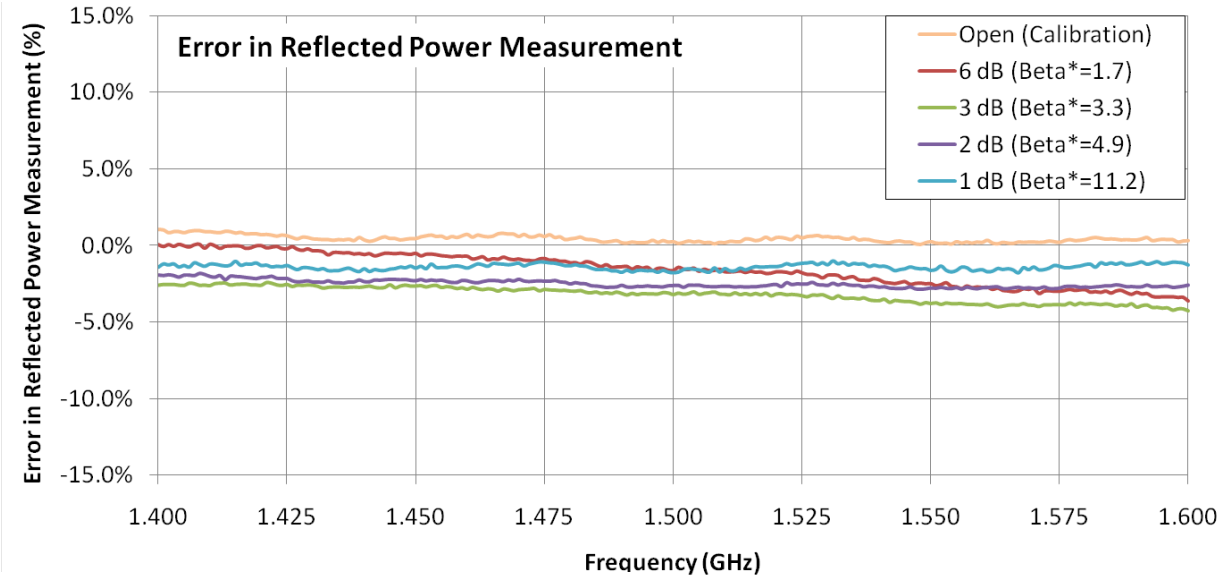

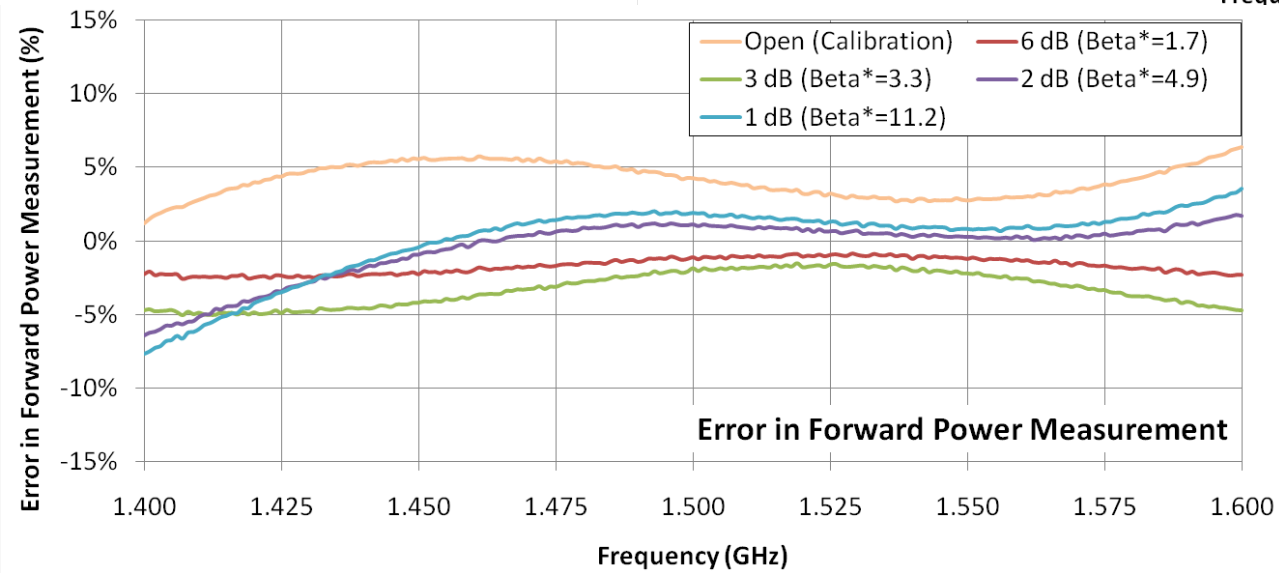

Error in power measurement with different loads on the output of the directional coupler (i.e. different beta*) CT Microwave 441433, serial 73091

MEASUREMENT CONCLUSIONS

- Quality measurements necessary to qualify superconducting cavities require quality equipment designs, careful measurement techniques and well characterized calibrations processes.
- Errors for the standard measurements are calculable. However, the are a function of the measurement equipment, the quality of the calibration and the specific conditions of each data point. As such they should be included in the measurement system not as an afterthought.
- In addition to the slides presented, I have included a handout of the equations for both the cavity measurements and the associated errors.
- I want to thank all of the folks in the SRF Institute at Jefferson Lab for their constant patience in helping me put this presentation together.

PRACTICAL ASPECTS OF OPERATION

- Interlocks
- Optimizing Loaded-Q
- Pulsed response as a function of loaded-Q
- Multiple cavities driven by a single source

CRYOMODULE INTERLOCKS

- **NEVER OPERATE A CRYOMODULE WITH THE COUPLER INTERLOCKS BYPASSED**
- **Coupler Interlocks**
  - Arc detector(s)
  - Coupler vacuum
  - Window temperature
  - Water flow (If water cooled)
  - Electron probe (Useful but not required)
  - Water temperature (Useful but not required)
- **RF Driven Interlocks**
  - Quench detection
  - E^2/P_{FWD} ratio
  - Gradient Present with RF off
- **Cryomodule**
  - Cavity vacuum
  - Helium level
  - Helium pressure (Useful but not required depending on cryo plant)
  - Insulating vacuum (Useful but not required)

OPTIMIZING LOADED-Q

$$P_{Kly} = \frac{(\beta+1)\,L}{4\beta\, Q_L\,(r/Q)}\left\{\left(E + I_0 Q_L\,(r/Q)\cos\psi_B\right)^2 + \left(2Q_L\frac{\delta f}{f_0}E + I_0 Q_L\,(r/Q)\sin\psi_B\right)^2\right\}$$

Assuming that $\beta >> 1$ this reduces to

$$P_{Kly} = \frac{L}{4Q_L\,(r/Q)}\left\{\left(E + I_0 Q_L\,(r/Q)\cos\psi_B\right)^2 + \left(2Q_L\frac{\delta f}{f_0}E + I_0 Q_L\,(r/Q)\sin\psi_B\right)^2\right\}$$

- **Where**
  - δf **is the frequency shift of the cavity from the generator frequency**
  - ψ_B **is the phase of the resultant* beam relative to cavity gradient and**
  - $\beta = (Q_0 - Q_L) / Q_L$

- **You need to take the derivative of this equation with respect to Q_L in order to calculate the minimum klystron power necessary.**

*** Note: For an multiple beams at once, i.e. an energy recovered linac (ERL), the resultant beam current is the vector sum of the beams**

MODERATE AMOUNT OF MATH

$$P_{Kly} = \frac{L}{4Q_L\,(r/Q)}\left\{\left(E + I_0 Q_L\,(r/Q)\cos\psi_B\right)^2 + \left(2Q_L\frac{\delta f}{f_0}E + I_0 Q_L\,(r/Q)\sin\psi_B\right)^2\right\}$$

$$\text{Let } A = \left(2\frac{\delta f}{f_0}E + I_0\,(r/Q)\sin\psi_B\right)^2 \text{ and } B = I_0(r/Q)\cos\psi_B$$

$$P_{Kly} = \frac{L}{4Q_L\,(r/Q)}\left\{\left(E + Q_L B\right)^2 + Q_L^2 A\right\}$$

For minimum P_{Kly} as a function of Q_L :

$$\frac{dP_{Kly}}{dQ_L} = 0 = \frac{L}{4(r/Q)}\frac{d}{dQ_L}\left(\frac{1}{Q_L}\left\{\left(E + Q_L B\right)^2 + Q_L^2 A\right\}\right)$$

$$0 = \frac{-1}{Q_L^2}\left\{\left(E + Q_L B\right)^2 + Q_L^2 A\right\} + \frac{1}{Q_L}\left\{2B\left(E + Q_L B\right) + 2Q_L A\right\}$$

$$0 = Q_L^2(B^2 + A) - E^2 = Q_L^2 - \frac{E2}{B^2 + A}$$

$$Q_L\Big|_{MinPower} = \frac{E}{\sqrt{B^2 + A}} = \frac{E}{\sqrt{\left(I_0(r/Q)\cos\psi_B\right)^2 + \left(2\frac{\delta f}{f_0}E + I_0\,(r/Q)\sin\psi_B\right)^2}}$$

REDUCED SOLUTION FOR SRF CAVITIES OPERATED ON CREST

$$Q_L\Big|_{MinPower} = \frac{E}{\sqrt{\left\{\left(I_0(r/Q)\cos\psi_B\right)^2 + \left(2\frac{\delta f}{f_0}E + I_0\,(r/Q)\sin\psi_B\right)^2\right\}}}$$

A typical linac operated on crest, with no microphonics

$$Q_L\Big|_{MinPower} \cong \frac{E}{I_0(r/Q)}$$

For an perfect energy recoverd linac with microphonics

$$Q_L\Big|_{MinPower} \cong \frac{f_0}{2|\delta f|}$$

But life is never perfect

THE EFFECTS OF TUNING ON OFF CREST CW BEAM LOADING

- On beam turn on the forward power increases the phase shifts and microphonics effects are multiplied

- The tuner operates with a goal of making ψ_{Kly} *equal to zero by* shifting the frequency by δf_S which compensates for the $I_0 R_C \sin\psi_B$ term.

- Thus $\psi_{Kly} \rightarrow 0$ and P_{Kly} is minimized to:

$$P_{Kly} = \frac{(\beta+1)L}{4\beta\, R_C}\left\{\left(E + I_0 R_C \cos\psi_B\right)^2 + \left(2Q_L \frac{\delta f_M}{f_0} E + 2Q_L \frac{\delta f_S}{f_0} E + I_0 R_C \sin\psi_B\right)^2\right\}$$

$\rightarrow 0$

- Where δf_M is the frequency shifts due to microphonics

- Thus in this case:

$$Q_L\Big|_{MinPower} = \frac{E}{\sqrt{\left(I_0 (r/Q)\cos\psi_B\right)^2 + \left(2\frac{\delta f_M}{f_0} E\right)^2}}$$

THEORETICAL EXAMPLE OF TUNERS COMPENSATING FOR OFF CREST BEAM LOADING

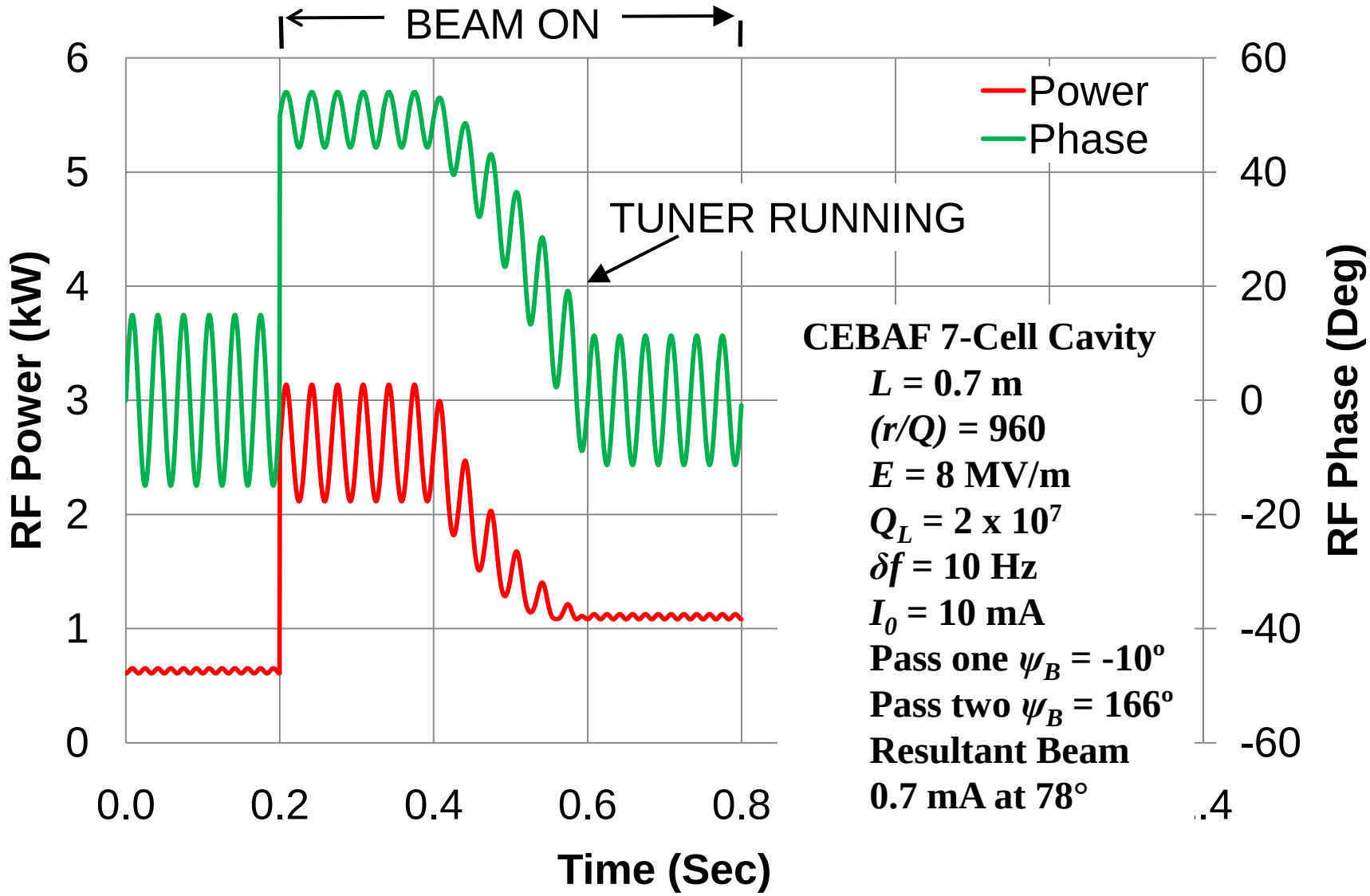

THEORETICAL EXAMPLE OF TUNERS COMPENSATING FOR OFF CREST BEAM LOADING

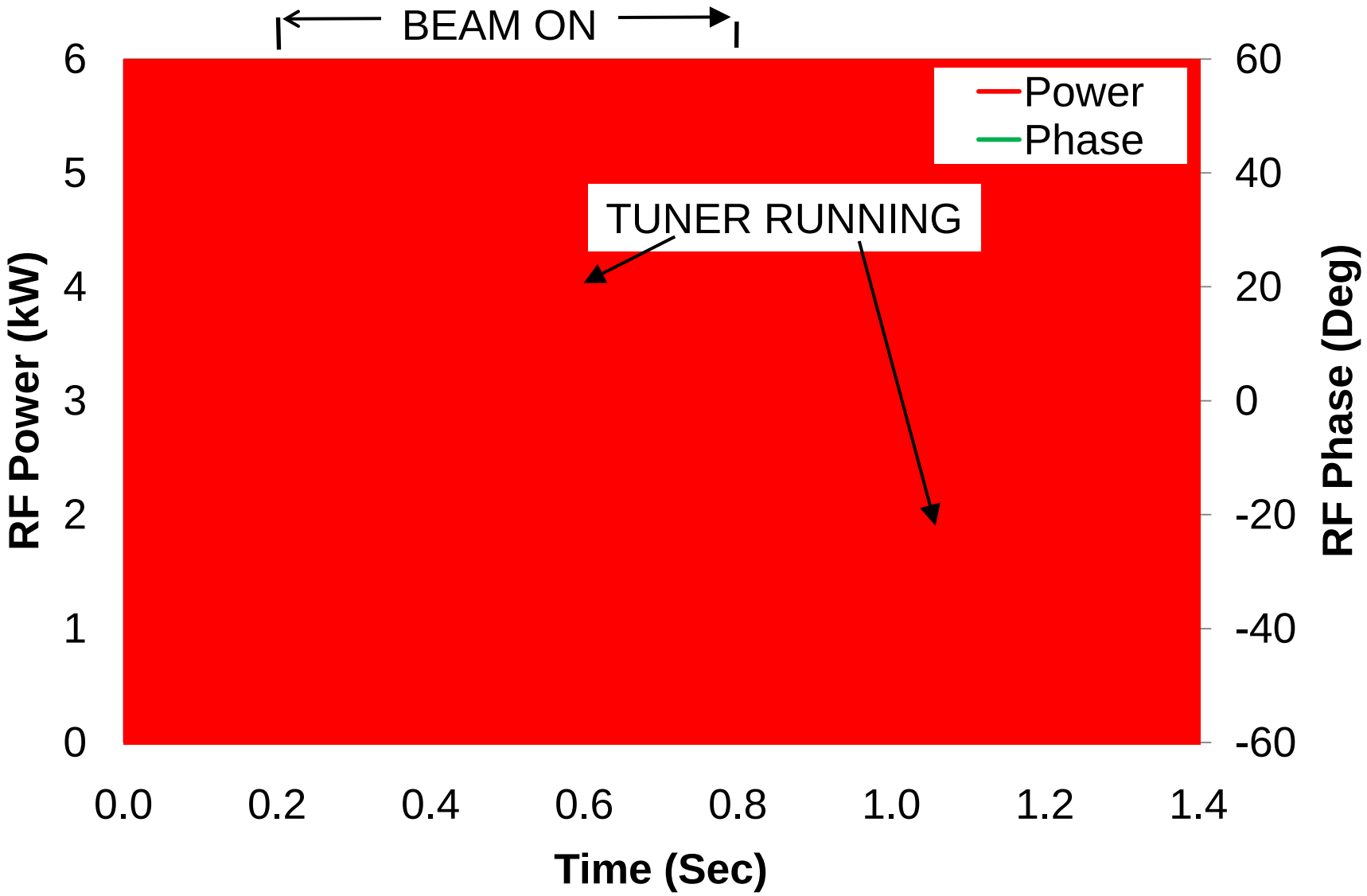

PREDICTED AND MEASURED FORWARD POWER IN AN ERL

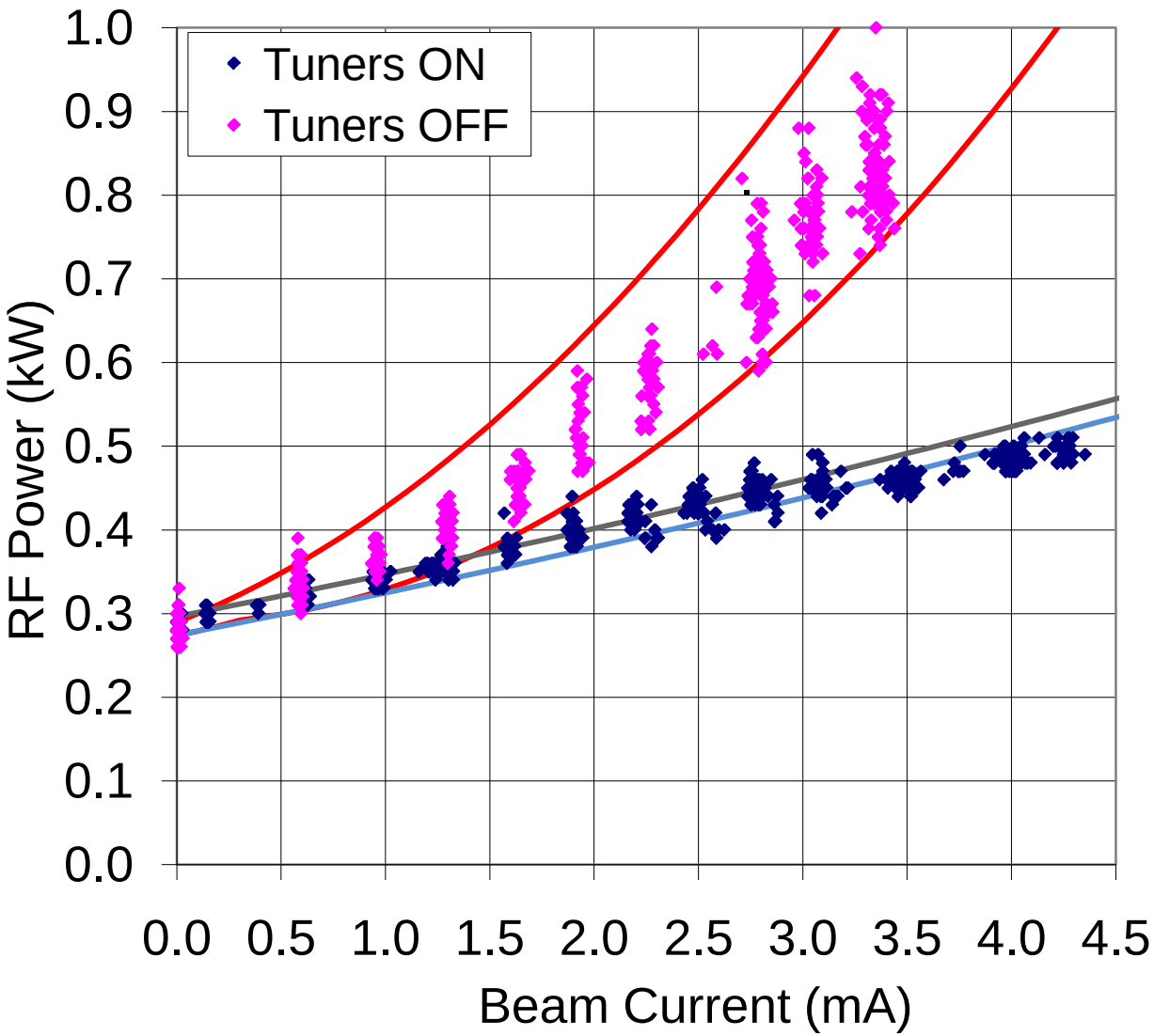

- **The solid lines indicate the predicted values based on:**
  - **$Q_L = 2 \times 10^7$**
  - **E = 5.6 MV/m.**
  - ***Δf = 10 Hz***
- **Test Process:**
  - **Tune the cavity with no current.**
  - **Disable the mechanical tuners.**
  - **Ramp the current up and record the forward power and phase.**
  - **Repeat with Tuners enabled.**

Predicted and Measured RF Drive Phase In an ERL

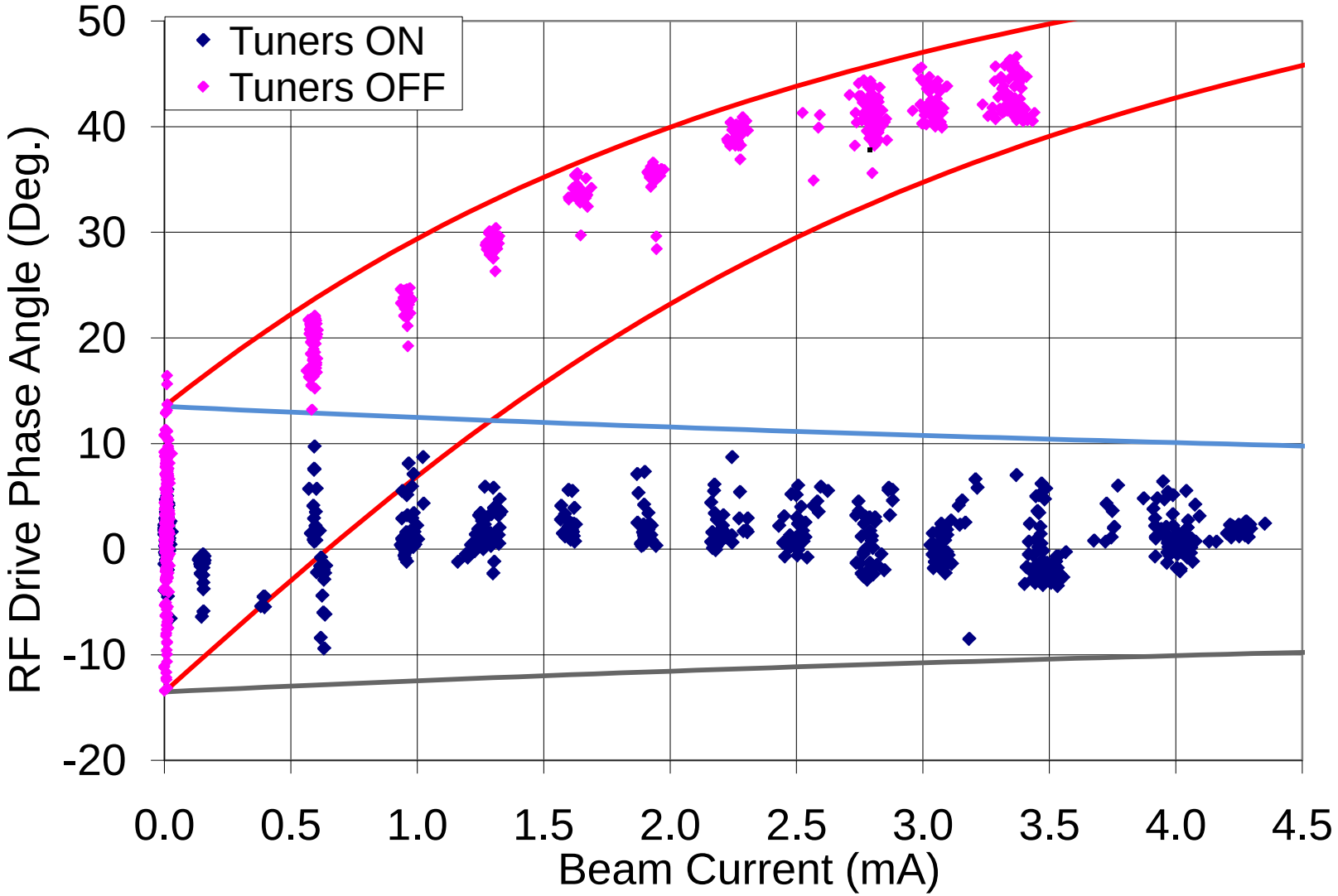

EFFECTS OF MICROPHONICS AND IMPERFECT ENERGY RECOVERY IN AN ERL CAVITY E = 20 MV/m, I_0 = 100 mA

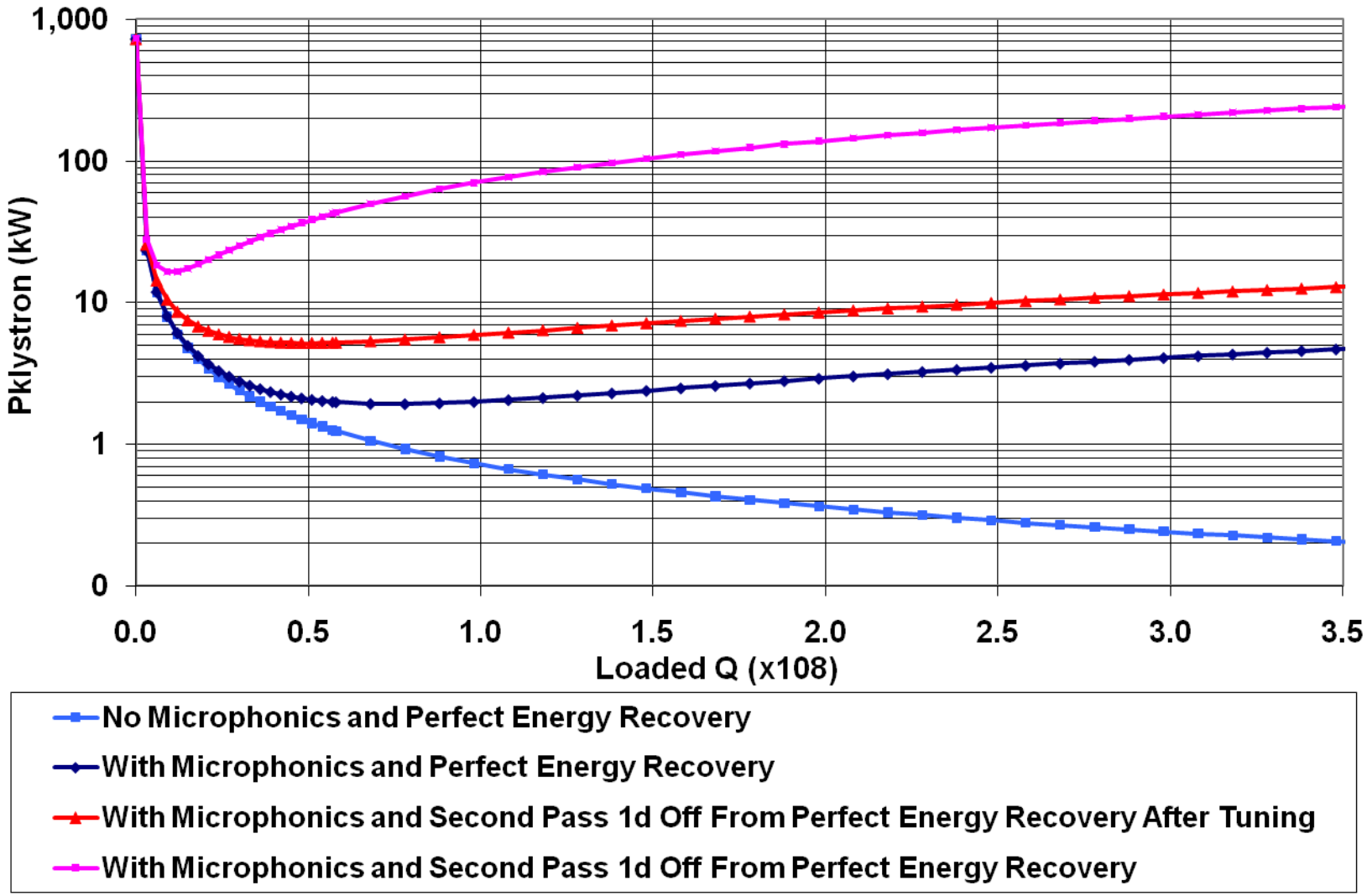

SELECTING LOADED-Q FOR OFF CREST BEAM

- **Selection of loaded-Q has implications on RF power requirements.**
- **When the beam is operated on crest the process is straight forward and margins only have to be added for**
  - **Microphonics,**
  - **Uncertainties in cavity parameters such as Q_L and operating gradient.**
  - **Overall Margin**
  - **Detuning effects.**
- **When the beam is not operated on crest operational modes must be considered. Often this can substantially reduce the RF power requirements.**
  - **Ramping current simultaneous with operating tuners.**
  - **Allowed levels of pulsed operation**
  - **Uncertainty of the relative beam phases in an ERL**

"SIMPLE" BLOCK DIAGRAM OF CONTROL SYSTEM

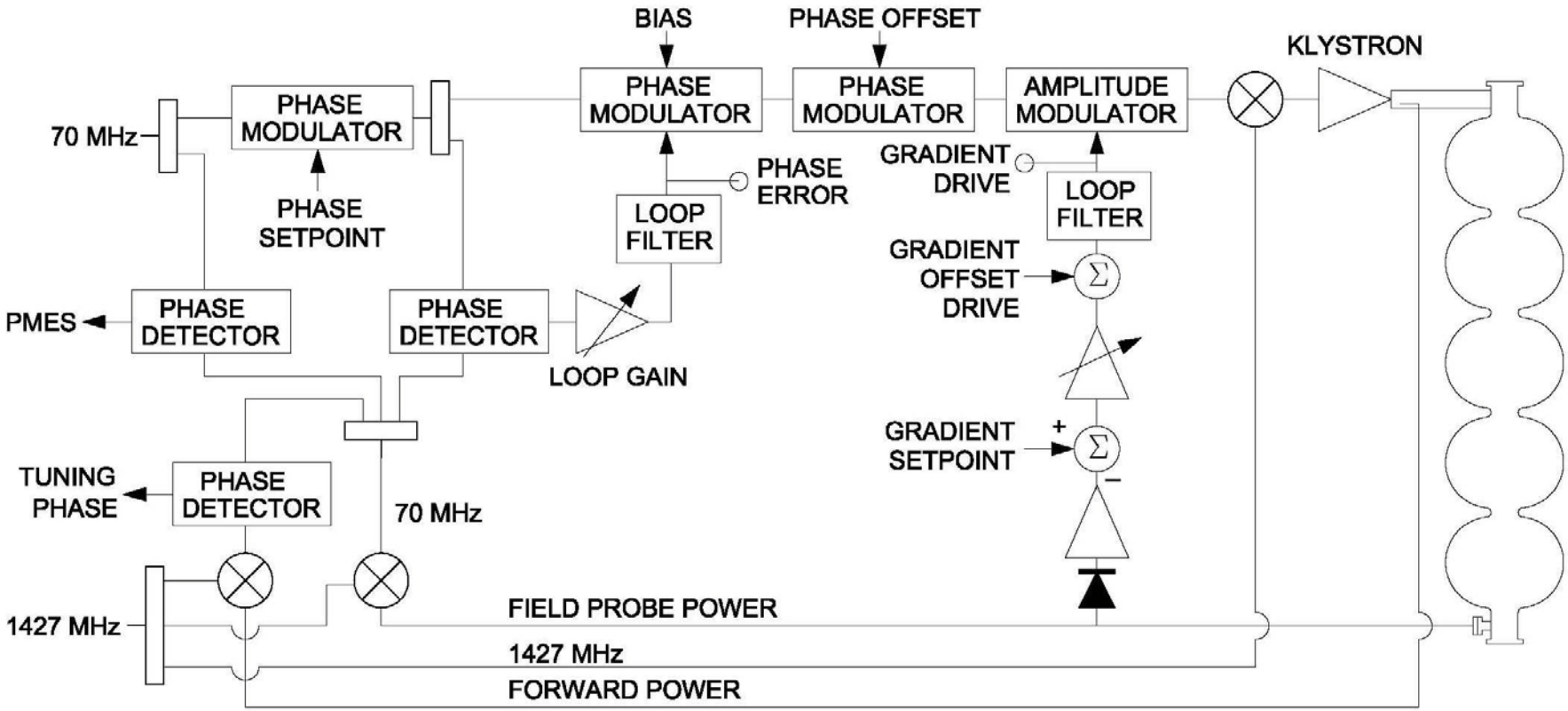

CONTROL SYSTEM OVERVIEW

- System down converts to 70 MHz
- Phase and amplitude control are done at 70 MHz.
- Software control of loop gains allows for on the fly changes during operations.
- Analog monitor ports, coupled with the FEL's analog monitoring system allows us to monitor the health of the control loops during CW and pulsed operations
- Bias control on phase shifter allows increased range at the price of loop gain.
- The design has 20 years of history and successful use at CEBAF.

CONTROL SYSTEM "FEATURES"

- System designed in the early 90s for a CW machine.
- Proportional control, no integral term, no derivative term.
- No flexibility in control loop to increase the speed when driving the low bandwidth fundamental power couplers
- Nominal phase loop control range +/-45º
- 6/7 or 4/5 Pi mode filter hard wired on analog board.
- Designed for CW operations, which meant problems during high current pulsed operations.

TYPICAL CONTROL TRANSIENTS LOADED Q = $1x10^5$

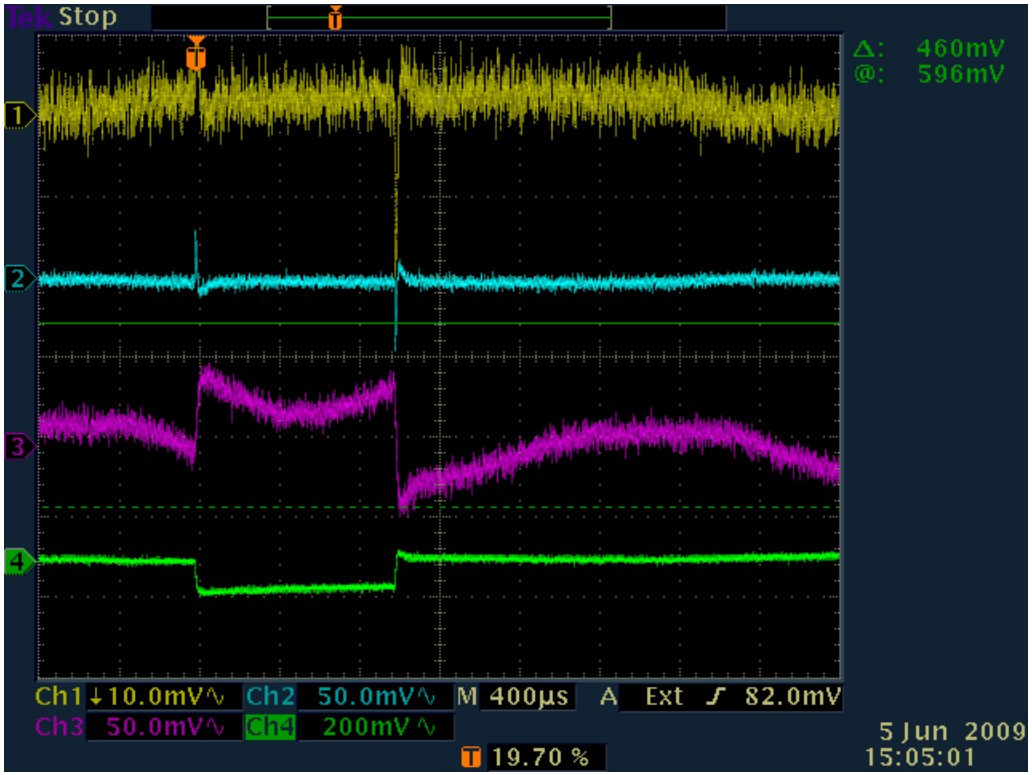

1 Measured gradient
2 Measured phase
3 Gradient drive
4 Phase drive

I_{BEAM} = 600 uA
Phase ≅ 90°

- "Normal" beam loading in the buncher cavity where the beam is at the zero crossing.
- Note the fast rise time of the signals and the short transients on the measured phase signal

TYPICAL CONTROL TRANSIENTS LOADED Q = $2x10^6$

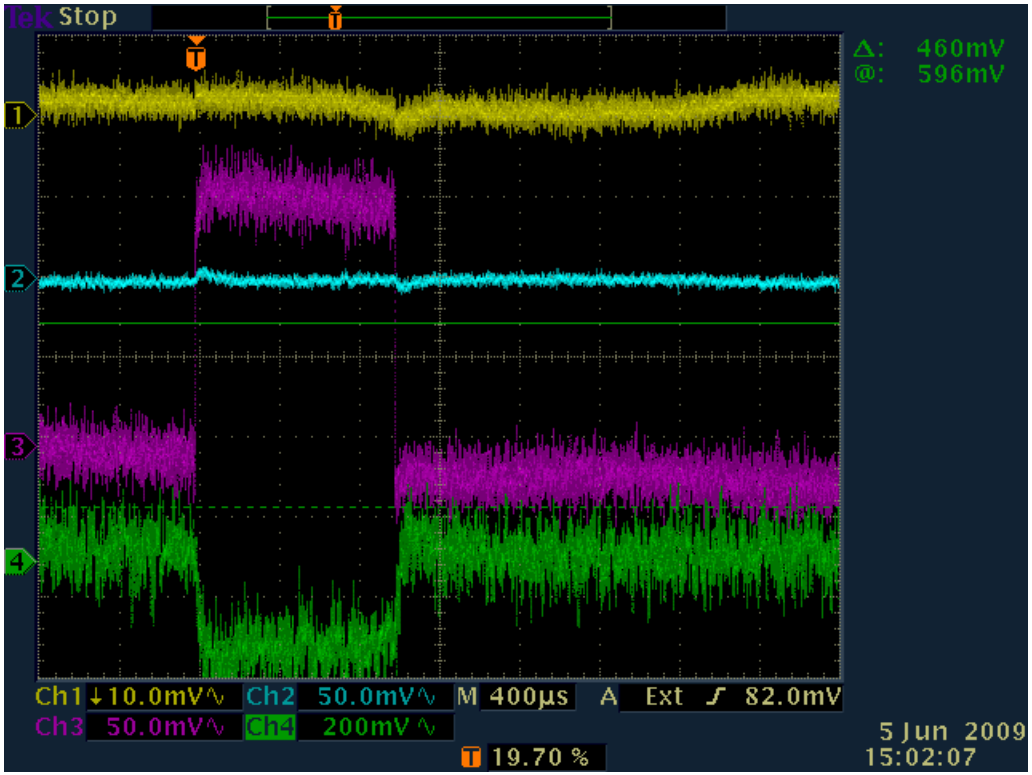

1 Measured gradient
2 Measured phase
3 Gradient drive
4 Phase drive

I_{BEAM} = 600 uA
Phase ≅ 90°

- **"Normal" beam loading in the injector where the beam is near crest.**
- **Note the rise time of the signals and the fact that Gradient drive signal has a moderate transient.**

TYPICAL CONTROL TRANSIENTS LOADED Q = $2x10^7$

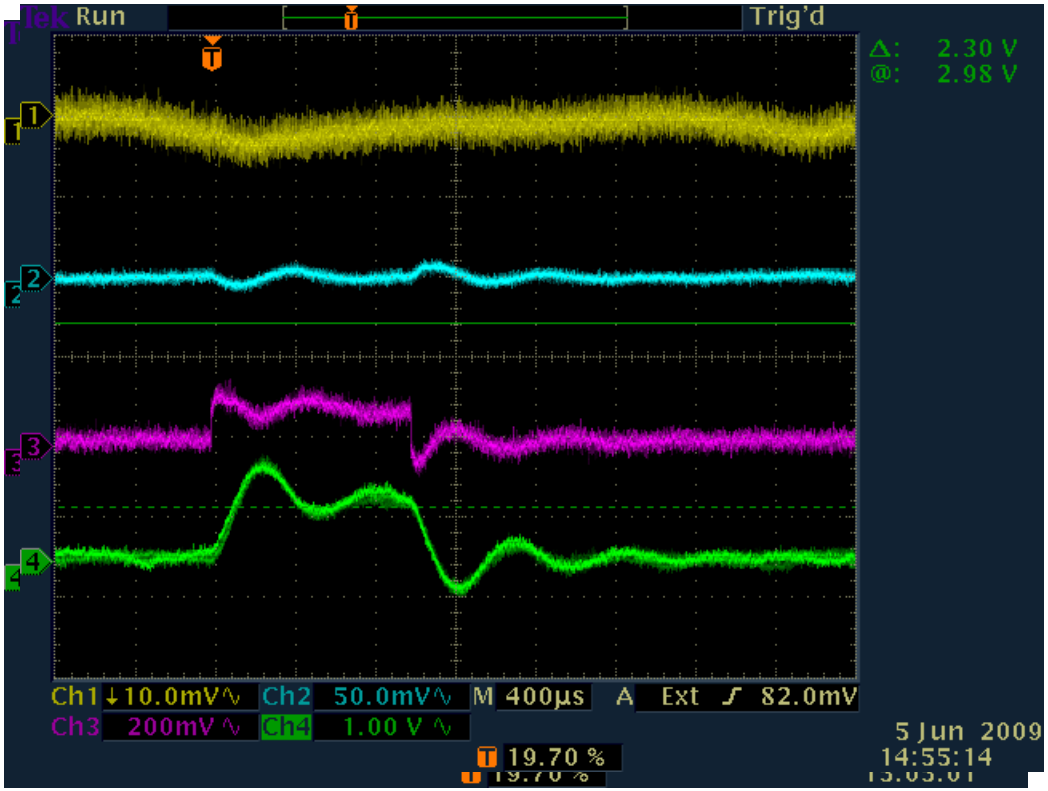

1 Measured gradient
2 Measured phase
3 Gradient drive
4 Phase drive

I_{BEAM} = 600 uA
Phase ≅ 90°

- **Beam loading on a high Loaded-Q cavity.**
- **Note the rise time of the signals and the fact that Phase drive signal has a fairly large transient.**

TYPICAL CONTROL TRANSIENTS LOADED Q = $1x10^5$

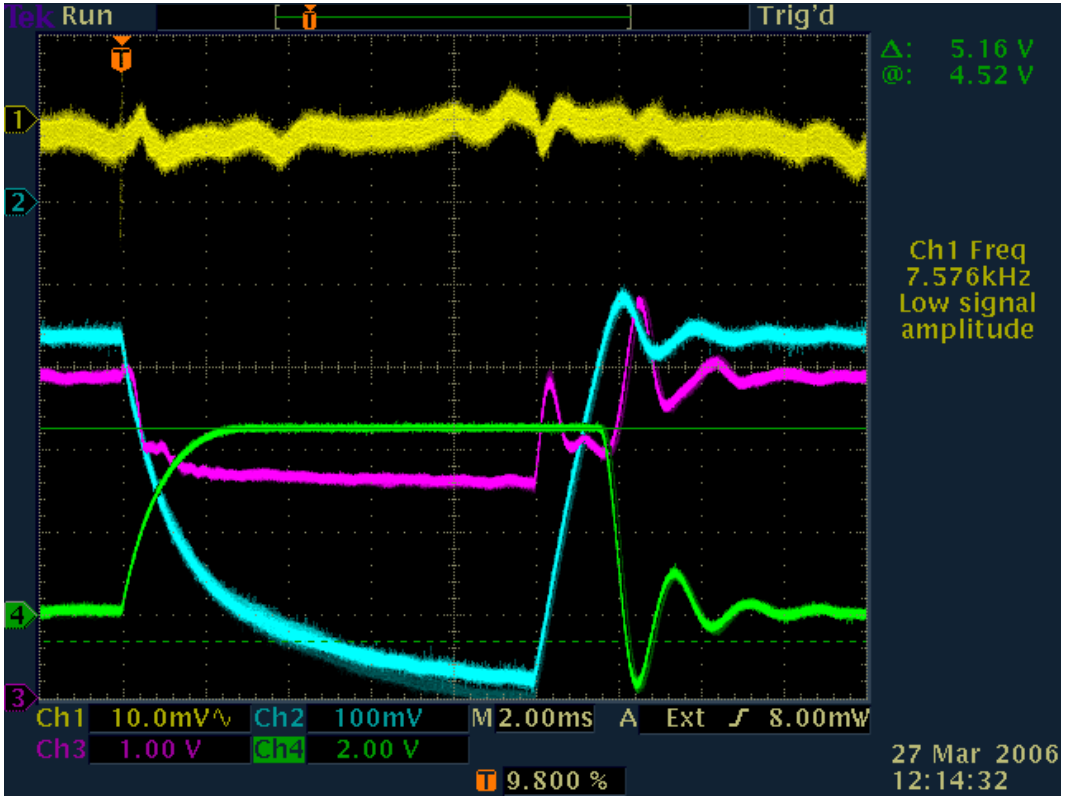

1 Measured gradient
2 Measured phase
3 Gradient drive
4 Phase drive

I_{BEAM} = 600 uA
Phase ≅ 90°

- **Note the measured phase has a large transient.**
- **Note that the phase drive signal is saturated**
- **This was "fixed" by adjusting the phase modulator bias signal thus providing more range.**

Pass Band Mode Filters

- Multicell cavities support a number of frequencies that are close to the fundamental frequency of the pi-mode.
- For the JLAB 5-cell cavity the closest mode is about 4 Mhz lower than the fundamental frequency.
- For the JLAB 7-cell cavity the closest mode is between 2 and 2.7 MHz lower than the fundamental.
- If the control system is not designed correctly this mode can be excited and an energy modulation is introduced on the beam.
- Although special filters were added to the low level RF system they were not always adequate to suppress these modes.
- Typically the 8/9 Pi mode on ILC cavities is 800 kHz below the Pi mode. Thus, it presents even more of a concern.

TYPICAL CONTROL TRANSIENTS LOADED Q = $1x10^5$

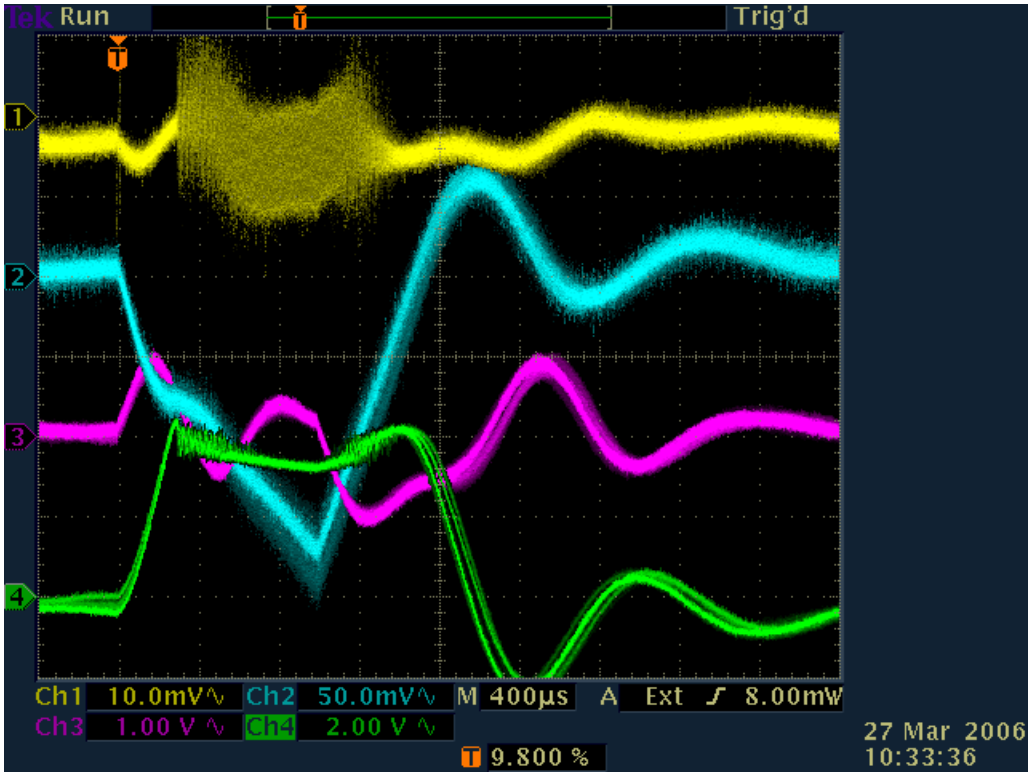

1 Measured gradient
2 Measured phase
3 Gradient drive
4 Phase drive

I_{BEAM} = 600 uA
Phase ≅ 90°

- **Beam loading on a high Loaded-Q cavity.**
- **In addition to poor phase regulation the 6/7-Pi mode is causing an oscillation in the system, which was remedied by lowering the broad band gain in the phase loop.**

MULTIPLE CAVITIES ON SINGLE SOURCE

- **It can be a desirable to use a single source to drive multiple cavities.**
  - **Reduced cost per Watt at higher RF –Power levels.**
  - **Availability of klystrons or IOTs at desired levels for multiple cavities.**
  - **Unavailability of klystrons, IOTs at desired power levels for single cavities.**
  - **Reduced number of LLRF systems to drive cavities.**

MULTIPLE CAVITIES ON SINGLE SOURCE

- **It can work fine when:**
  - **The cavities are operated near crest.**
  - **The beam is not sensitive to minor variations in gradient and phase.**
  - **Loaded-Qs are well matched.**
  - **Gradients are close to the same for all cavities.**
  - **The loaded-Qs are relatively low as compared to pressure sensitivity and microphonics.**
  - **You have the advantage of a large number of cavities and individual errors are corrected by statistics.**
- **It can present problems when:**
  - **The beam is sensitive to errors in gradients or phase.**
  - **Detuning becomes significant as compared to the FPC bandwidths.**
  - **Cavities are operated at different gradients.**
  - **Cavities have different loaded-Qs**
  - **Cavities are operated at different beam phases with respect to crest.**
- **While linacs are an area where this concept can be very practical, injectors are an area where the problems become important especially when space charge and cavity induced beam focusing are important.**

SIMULATION METHOD

- Use the basic complex RF voltage to complex gradient equation to calculate the field in each cavity, including beam phase and cavity detune angle.
- Sum the real and imaginary parts of the electric field.
- Compare the vector sum to the desired vector sum and calculate the error in the vector sum.
- Add, with gain, the complex error to the complex RF voltage from the current pass.
- Use this sum to calculate gradient in each cavity.
- Repeat until the real and imaginary parts of the vector sum error are below a threshold.

$$\overline{E} = \frac{1}{\left(1 + iTan\psi\right)} \sqrt{\frac{4\beta\, Q_L\, (r/Q)}{Z_0\left(\beta + 1\right) L}}\, \overline{V}_S - \frac{Q_L\, (r/Q)}{\left(1 + iTan\psi\right)} \overline{I}_0$$

Where ψ is the cavity detune angle.

ERROR IN GRADIENT AND PHASE WHEN 1 OF 3 CAVITIES IS DETUNED

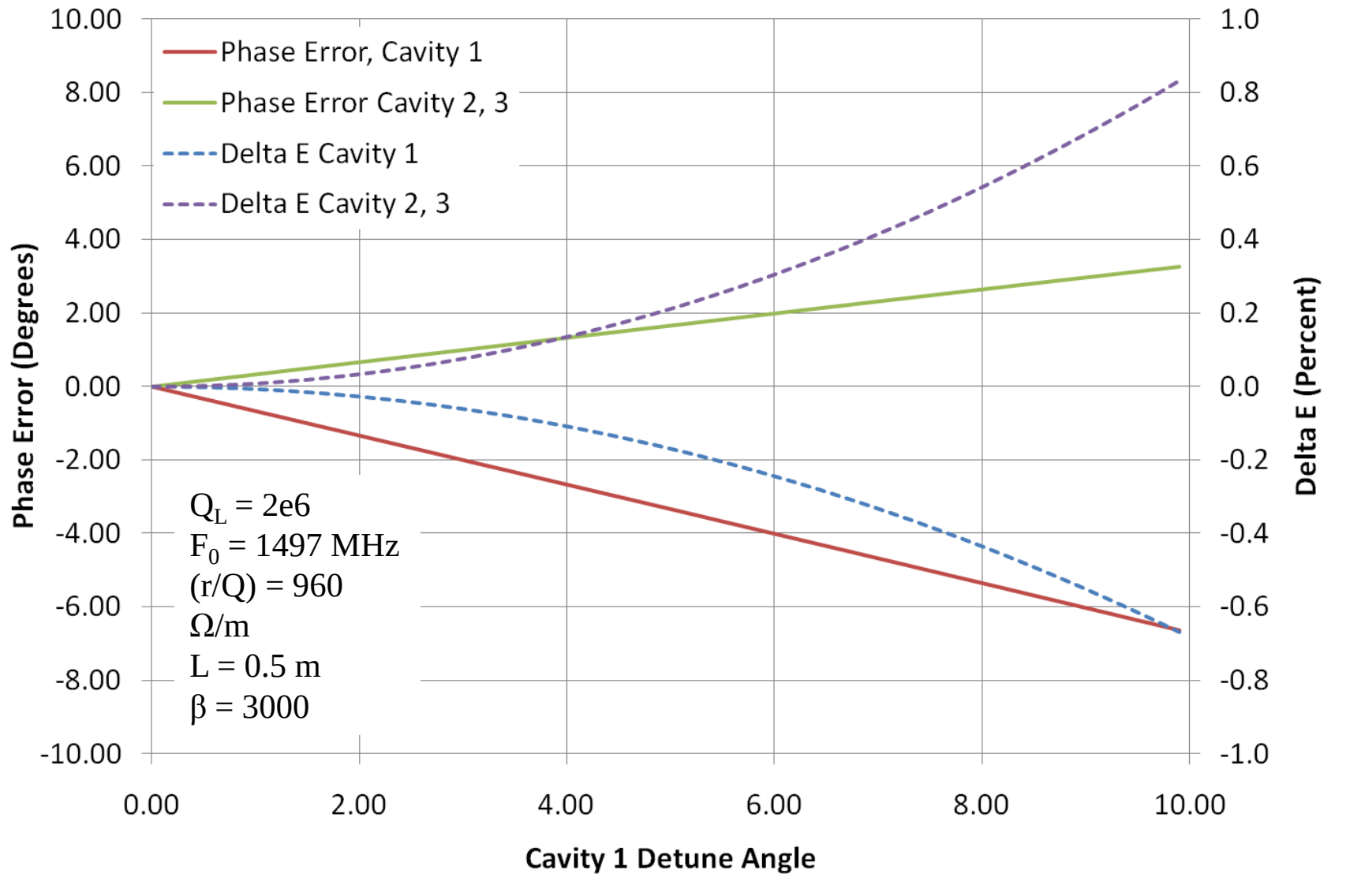

PHASE ERROR IN WHEN THE PHASE IN 1 OF 3 CAVITIES IS DIFFERENT

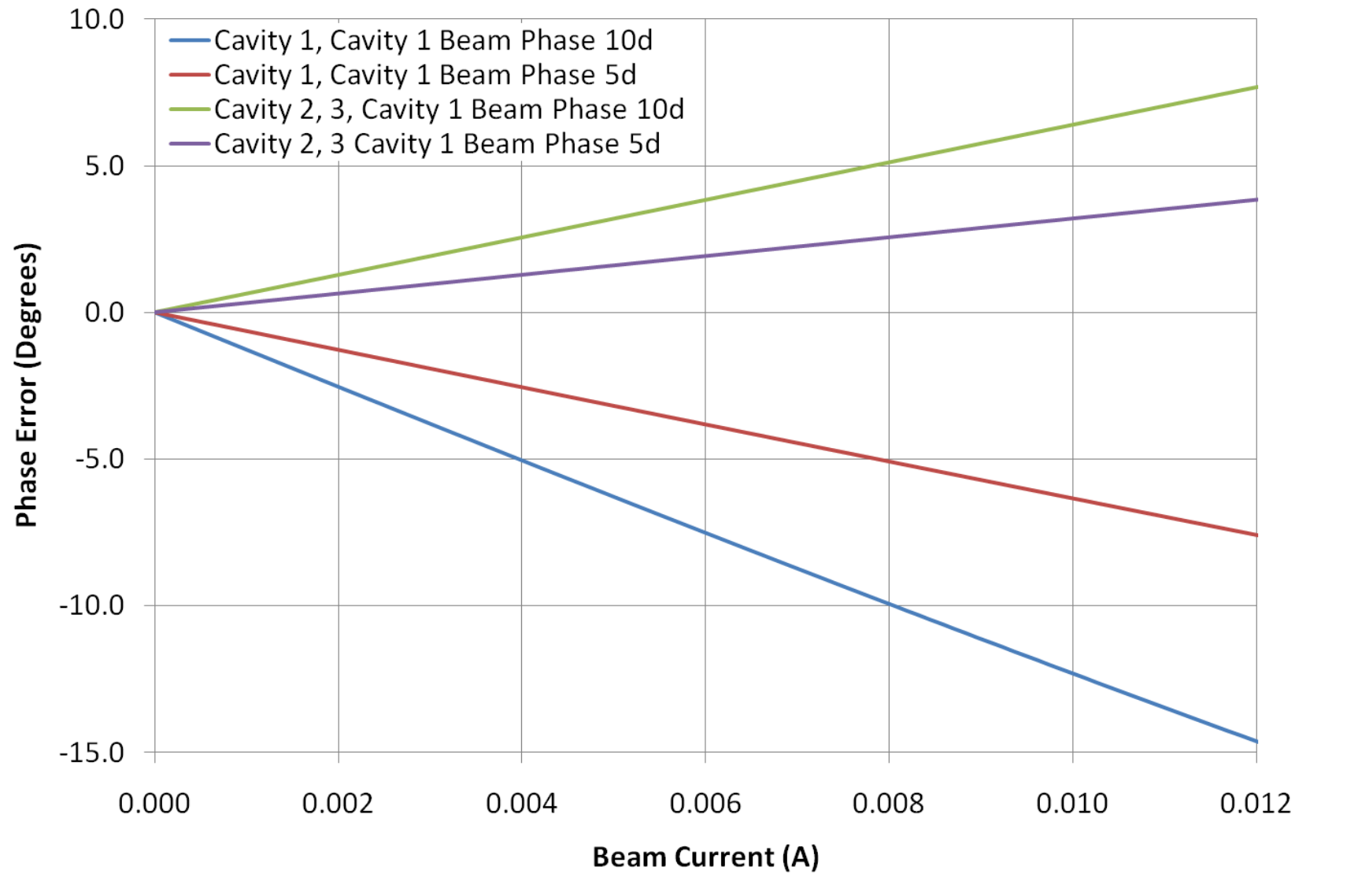

GRADIENT ERROR IN WHEN THE PHASE IN 1 OF 3 CAVITIES IS DIFFERENT

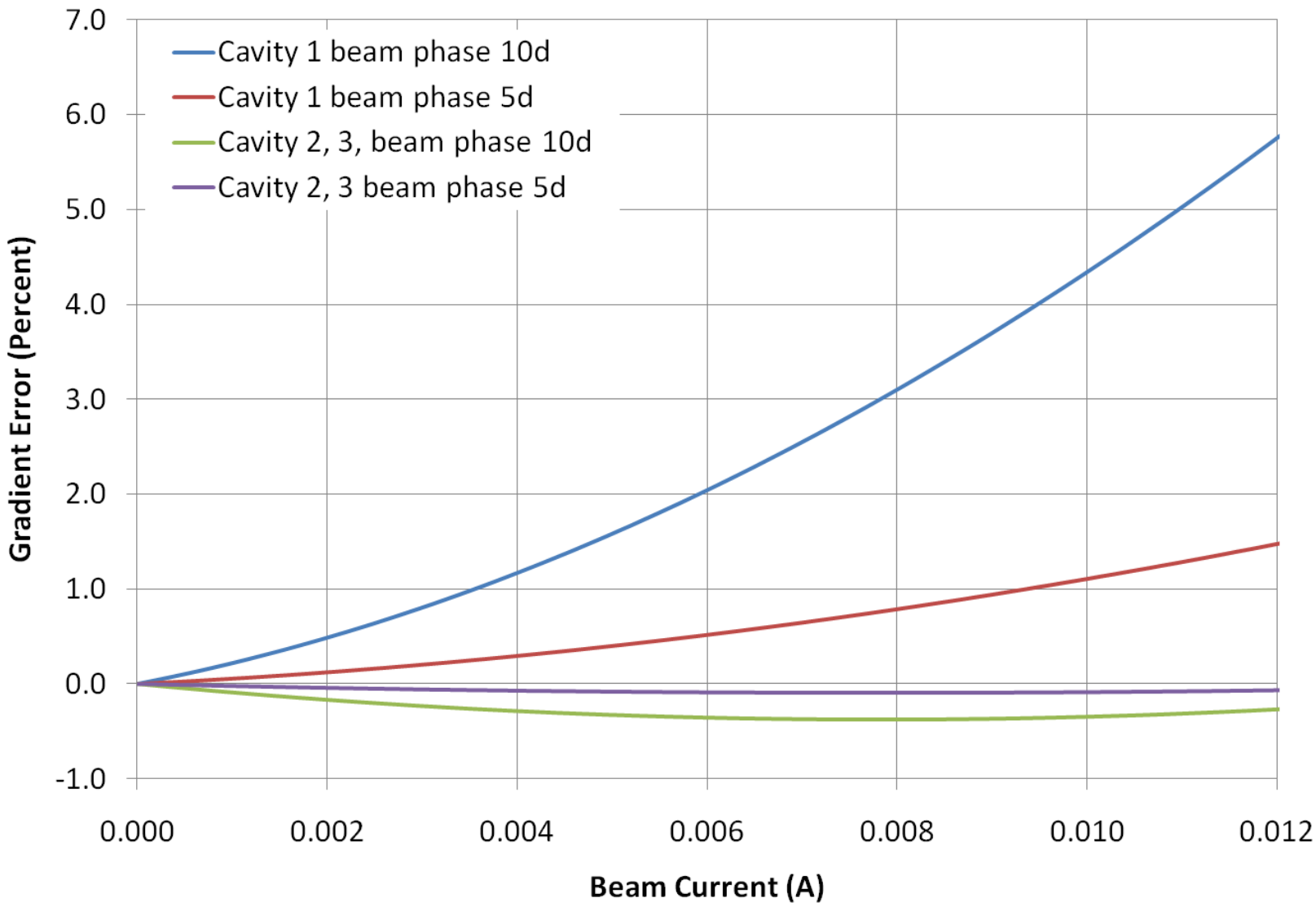

Gradient Error in When the Loaded-Q of 1 of 3 Cavities is Higher Than the Others

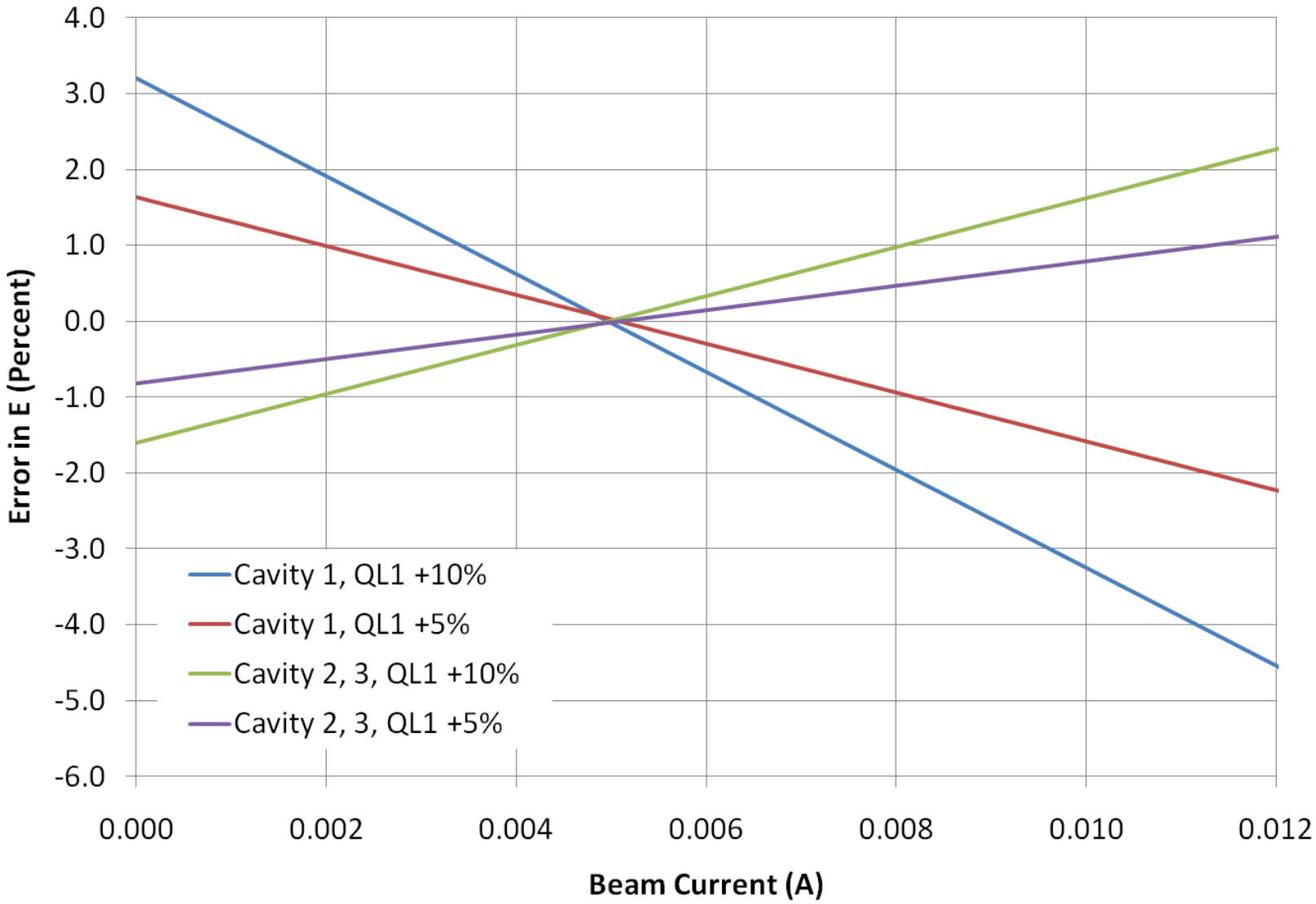

CONCLUSIONS

Thank you for your attention. I hope what I have presented will be useful.

Selected References.

Padamsee, Knobloch, and Hays, RF Superconductivity for Accelerators, John Wiley & Sons 1998.

T. Powers, "Theory and Practice of Cavity Test Systems" 2005 SRF Workshop. (Note: Includes all of the math for testing cavities)

T. Powers, "RF Controls Experience with the JLAB IR Upgrade FEL", 2009 ERL Workshop.

J. Delayen, et. al., "Development of a Digital Self Excited Loop for Field Control in High-Q Superconducting Cavities, SRF 2007.

L. Merminga, "RF Cavity Equations Steady State", JLAB Technical note TN-95-019.

K. Davis "Microphonics Testing of the CEBAF Upgrade 7-Cell Cavity". PAC 2001.