TEM-CLASS CAVITY DESIGN

Jean Delayen

Center for Accelerator Science
Old Dominion University
and
Thomas Jefferson National Accelerator Facility

First Words

- This is a very broad subject that has been in constant evolution for the last 40 years
  - New geometries are still being developed
  - Performance is still improving

- This tutorial cannot cover everything
  - I will focus on the fundamentals
  - It is intended to be complementary to the tutorial given by Alberto Facco at SRF 2009 with little overlap

Introduction

- There have been increased needs for reduced-beta (β<1) SRF cavity especially in CW machine (or high duty pulsed machine; duty >10 %)
  - Accelerator driven system (ADS)
    Nuclear transmutation of long-lived radio active waste
    Energy amplifier
    Intense spallation neutron source
  - Nuclear physics
    Radioactive ion acceleration
    Muon/neutrino production
  - Defense applications
- SRF technology → Critical path !!

Introduction

- **SRF cavity for CW application or long pulse application**
  - **efforts for expanding their application regions down to β~0.1,**

- **Reduced beta Elliptical multi-cell SRF cavity**
  - **for CW, prototyping by several R&D groups have demonstrated as low as β=0.47**
  - **for pulsed, SNS β=0.61, 0.81 cavities & ESS**

- **Elliptical cavity has intrinsic problem as β goes down**
  - **mechanical problem, multipacting, low RF efficiency**

- **Spoke cavity; supposed to cover ranges β=0.1~0.5(6), f=300~900 MHz**
  - **design & prototype efforts in RIA, AAA, EURISOL, XADS, ESS, etc.**

For proton β=0.12 corresponds ~7 MeV →all the accelerating structures (except RFQ)

Low and Medium β Superconducting Accelerators

	High Current	Medium/Low Current
CW	Accelerator driven systems waste transmutation energy production	Production of radioactive ions Nuclear Structure
Pulsed	Pulsed spallation sources	

High-current cw accelerators

- Beam: p, H^-, d
- Technical issues and challenges
  - Beam losses (~ 1 W/m)
  - Activation
  - High cw rf power
  - Higher order modes
  - Cryogenics losses
- Implications for SRF technology
  - Cavities with high acceptance
  - Development of high cw power couplers
  - Extraction of HOM power
  - Cavities with high shunt impedance

High-current pulsed accelerators

- Beam: p, H^-
- Technical issues and challenges
  - Beam losses (~ 1 W/m)
  - Activation
  - Higher order modes
  - High peak rf power
  - Dynamic Lorentz detuning
- Implications for SRF technology
  - Cavities with high acceptance
  - Development of high peak power couplers
  - Extraction of HOM power
  - Development of active compensation of dynamic Lorentz detuning

Medium to low current cw accelerators

- Beam; p to U
- Technical issues and challenges
  - Microphonics, frequency control
  - Cryogenic losses
  - Wide charge to mass ratio
  - Multicharged state acceleration
  - Activation
- Implications for SRF technology
  - Cavities with low sensitivity to vibration
  - Development of microphonics compensation
  - Cavities with high shunt impedance
  - Cavities with large velocity acceptance (few cells)
  - Cavities with large beam acceptance (low frequency, small frequency transitions)

Common considerations (I)

- Intermediate velocity applications usually do not require (or cannot afford) very high gradients

- Operational and practical gradients are limited by
  - Cryogenics losses (cw applications)
  - Rf power to control microphonics (low current applications)
  - Rf power couplers (high-current applications)

- High shunt impedance is often more important

- To various degrees, beam losses and activation are a consideration

Common considerations (II)

- Superconducting accelerators in the medium velocity range are mostly used for the production of secondary species
  - Neutrons (spallation sources)
  - Exotic ions (radioactive beam facilities)
- Medium power (100s kW) to high power (~MW) primary impinging on a target
- Thermal properties and dynamics of the target are important considerations in the design of the accelerator (frequency, duration, recovery from beam trips)
- Some implications:
  - Operate cavities sufficiently far from the edge
  - Provide an ample frequency control window

Design considerations

- Low cryogenics losses
  - High $QR_s * R_{sh}/Q$
  - Low frequency
- High gradient
  - Low E_p/E_{acc}
  - Low B_p/E_{acc}
- Large velocity acceptance
  - Small number of cells
  - Low frequency
- Frequency control
  - Low sensitivity to microphonics
  - Low energy content
  - Low Lorentz coefficient
- Large beam acceptance
  - Large aperture (transverse acceptance)
  - Low frequency (longitudinal acceptance)

A Few Obvious Statements

Low and medium β

- $\beta<1$
- Particle velocity will change

The lower the velocity of the particle or cavity β

- The faster the velocity of the particle will change
- The narrower the velocity range of a particular cavity
- The smaller the number of cavities of that β
- The more important it is that the particle achieve design velocity

Be conservative at lower β

Be more aggressive at higher β

A Few More Statements

Two main types of structure geometries

- TEM class (QW, HW, Spoke)
- TM class (elliptical)

Design criteria for elliptical cavities
Pagani, Barni, Bosotti, Pierini, Ciovati, SRF 2001.

Challenges and the future of reduced beta srf cavity design
Sang-ho Kim, LINAC 2002.

Low and intermediate β cavity design
Jean Delayen, SRF 2003

High-energy ion linacs based on superconducting spoke cavities
K. W. Shepard, P. N. Ostroumov, J. R. Delayen, PRSTAB **6**, 080101 (2003)

Superconducting Structures – Circa 1987

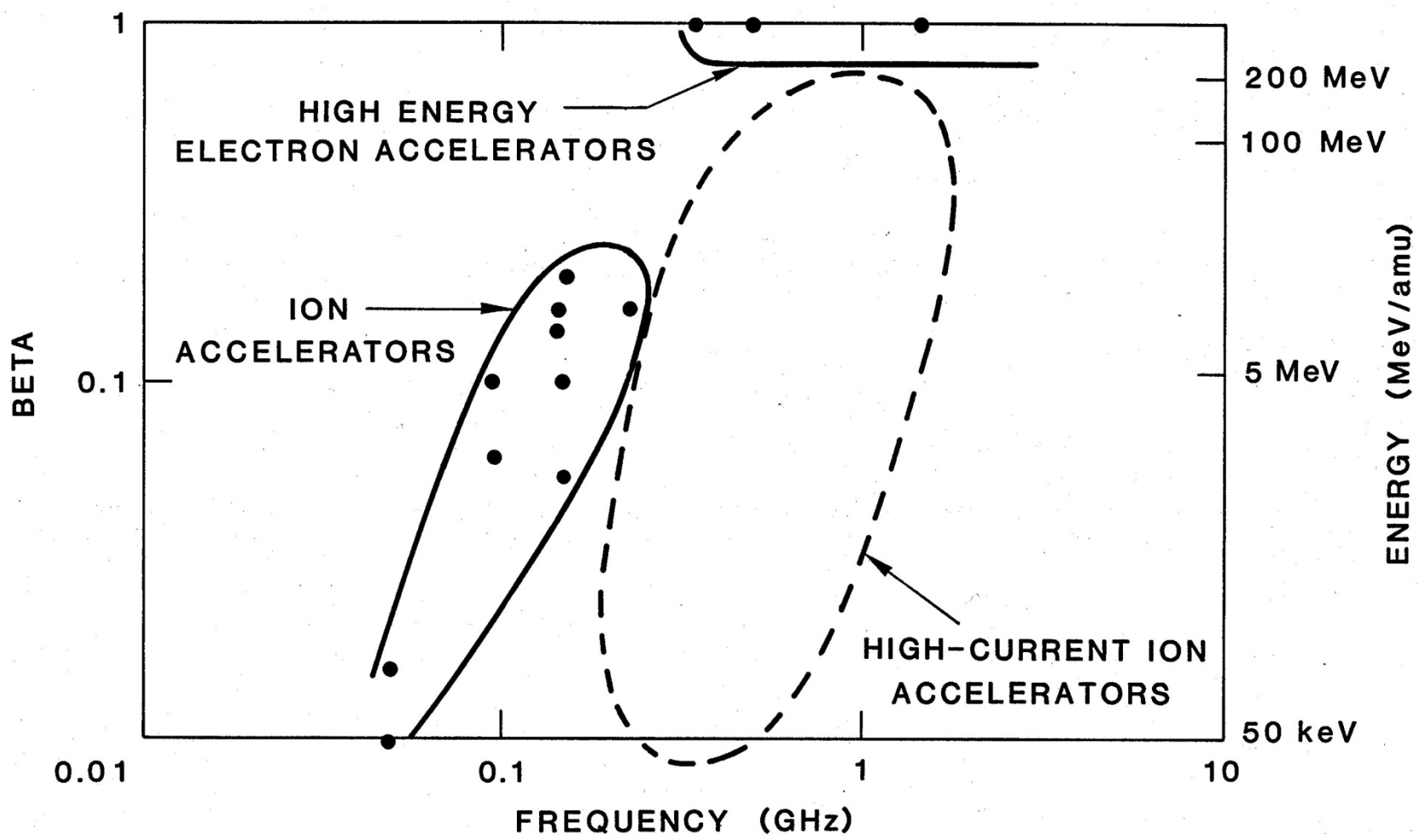

β<1 Superconducting Structures – Circa 1989

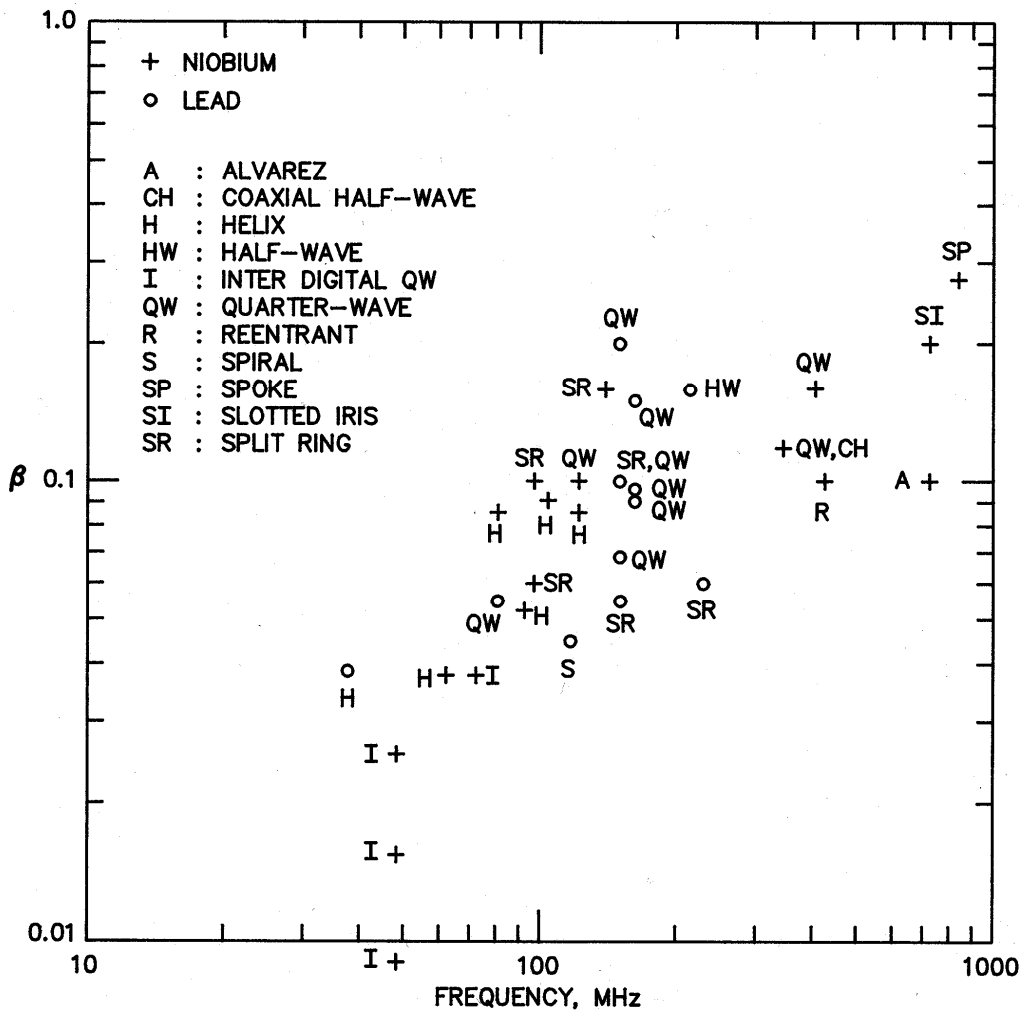

β<1 Superconducting Structures – 2002..

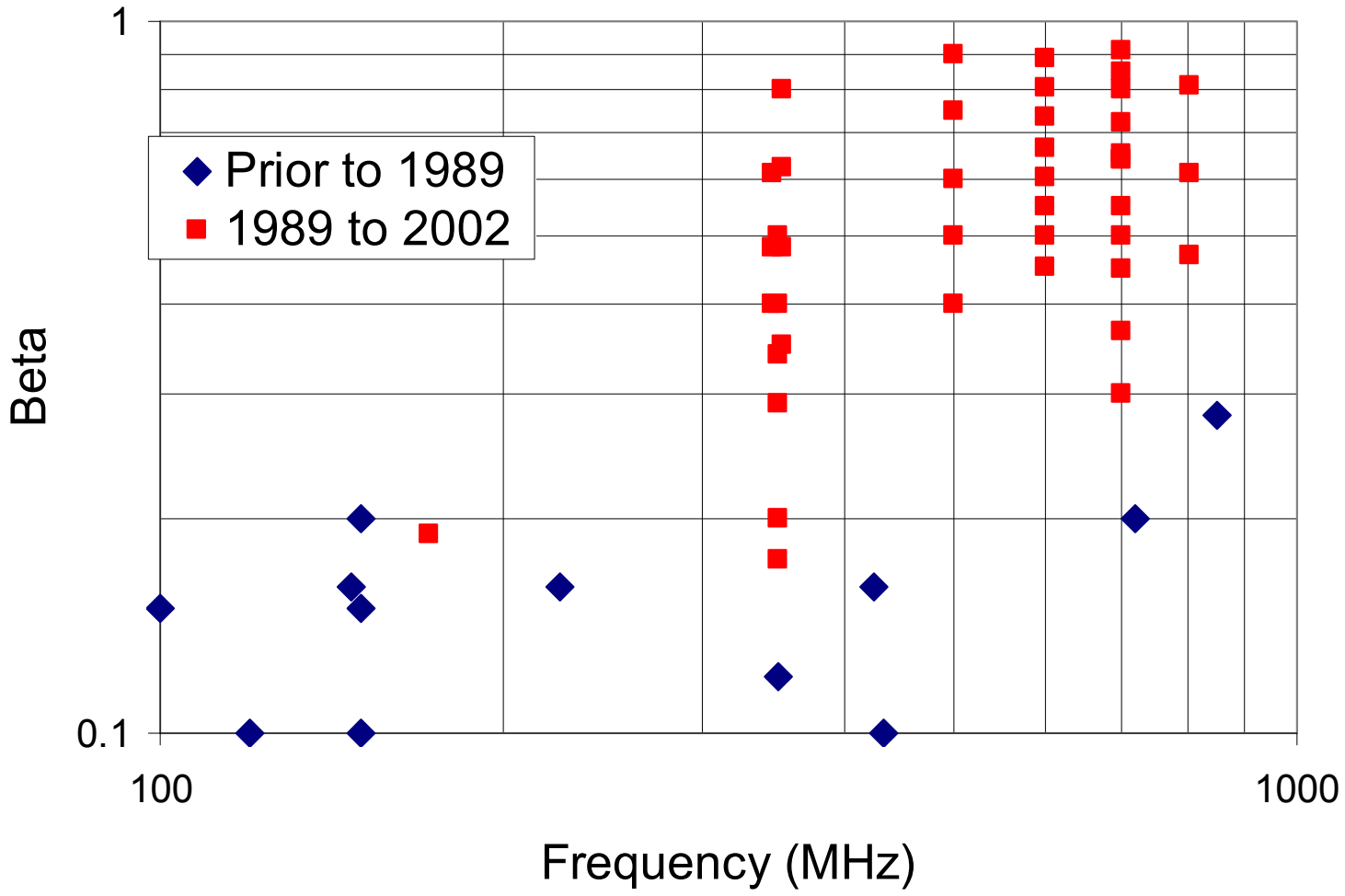

Basic Structure Geometries

Resonant Transmission Lines

- $\lambda/4$
  - Quarter-wave
  - Split-ring
  - Twin quarter-wave
  - Lollipop
- $\lambda/2$
  - Coaxial half-wave
  - Spoke
  - H-types

- **TM**
  - Elliptical
  - Reentrant
- **Other**
  - Alvarez
  - Slotted-iris

A Word on Design Tools

TEM-class cavities are essentially 3D geometries

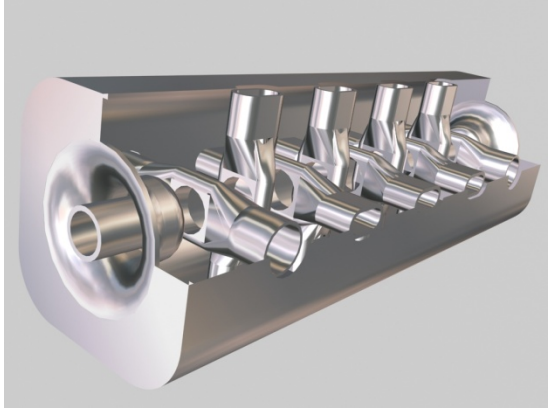

3D electromagnetic software is available

- MAFIA, Microwave Studio, HFSS, etc.

3D software is usually very good at calculating frequencies

- Not quite as good at calculating surface fields
  - Use caution, vary mesh size
  - Remember Electromagnetism 101

Design Tradeoffs

Number of cells

- Voltage gain
- Velocity acceptance

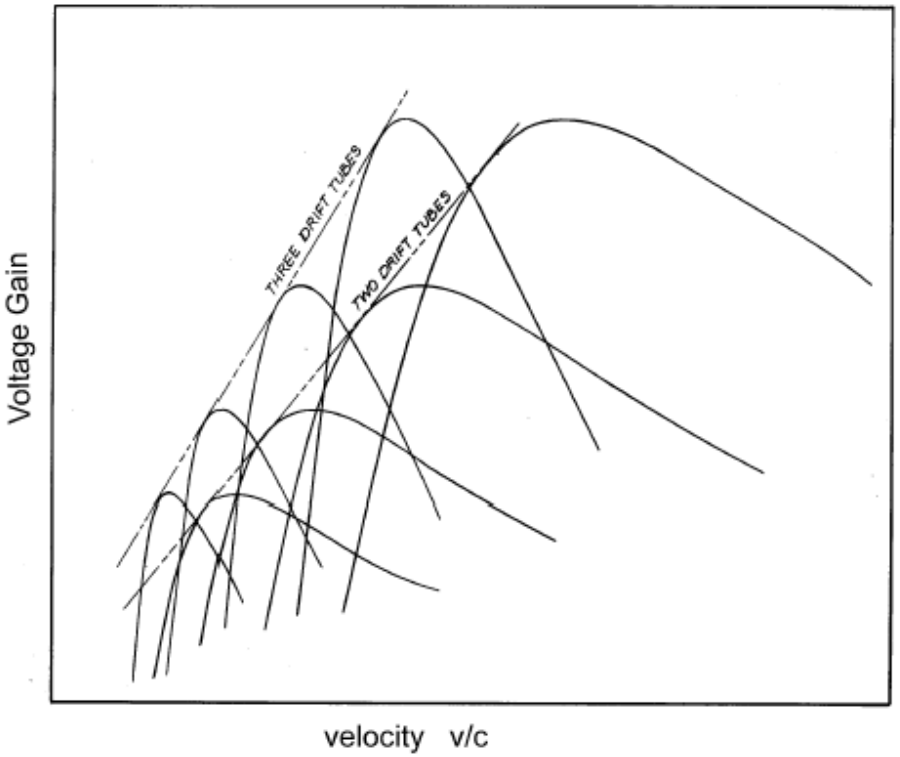

Frequency

- Size
- Voltage gain
- Rf losses
- Energy content, microphonics, rf control
- Acceptance, beam quality and losses

Velocity Acceptance

- **Energy gain** $\Delta W = q\ V\ T(x)\ \ \Phi(x)\ \ \cos\varphi$

$$x = \frac{\beta\lambda}{2l}$$

$T(x)$ **Transit time factor for single cell**

Depends on field profile in cell

$\Phi(x)$ **Phasing factor in multicell cavities**

Depends on cell spacing and field amplitude in cells

Does not depend on field profile in cells (assumed to be identical)

Velocity Acceptance

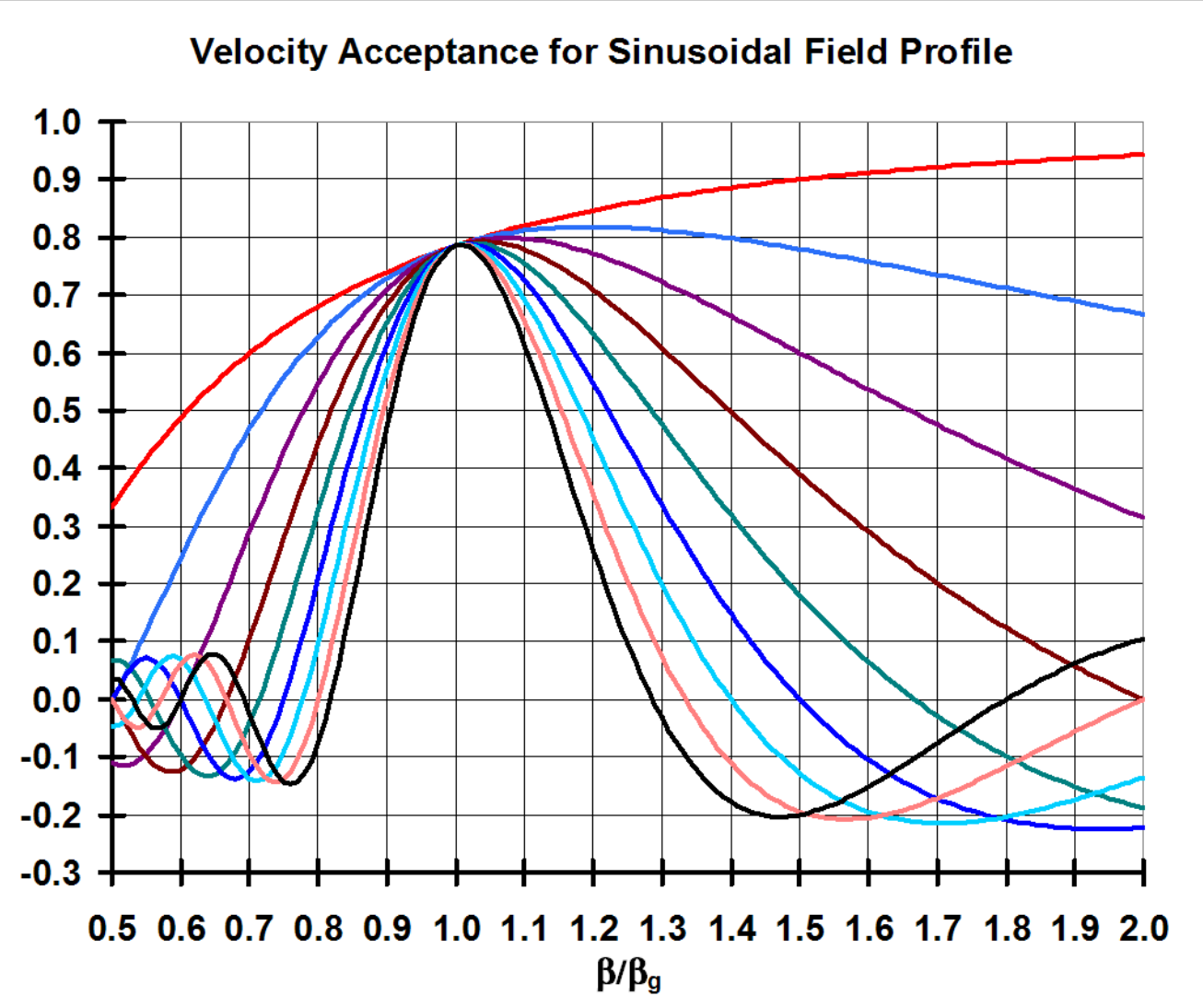

Energy Gain
Transit Time Factor - Velocity Acceptance

$$\Delta W = q \int_{-\infty}^{+\infty} E(z) \cos(\omega t + \phi)\, dz$$

Assumption: constant velocity

$$\Delta W = q \ \cos\phi \ \ \Delta W_0 \ \ T(\beta) \qquad \Delta W_0 = \Theta \int_{-\infty}^{+\infty} |E(z)|\, dz$$

$$\Theta = \frac{\dfrac{\text{Max}}{\beta} \displaystyle\int_{-\infty}^{+\infty} E(z) \cos\left(\frac{\omega z}{\beta c}\right) dz}{\displaystyle\int_{-\infty}^{+\infty} |E(z)|\, dz}$$

Transit Time Factor

$$T(\beta) = \frac{\displaystyle\int_{-\infty}^{+\infty} E(z) \cos\left(\frac{\omega z}{\beta c}\right) dz}{\dfrac{\text{Max}}{\beta} \displaystyle\int_{-\infty}^{+\infty} E(z) \cos\left(\frac{\omega z}{\beta c}\right) dz}$$

Velocity Acceptance

Transit Time Factor

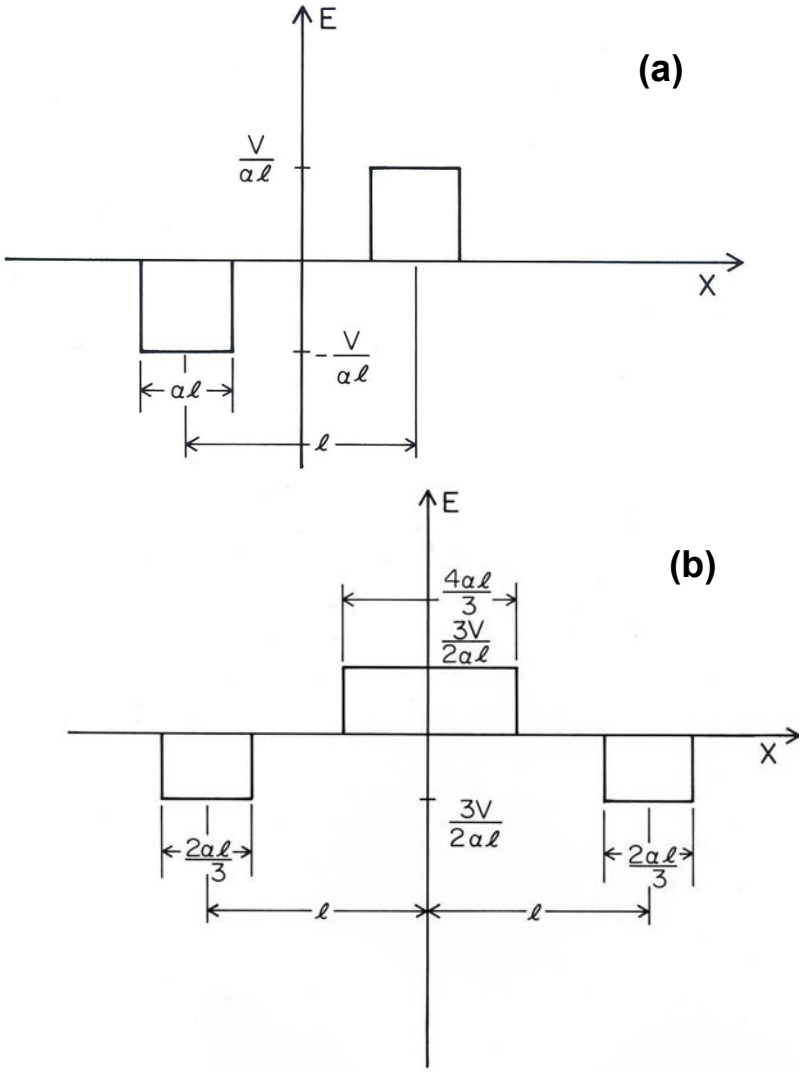

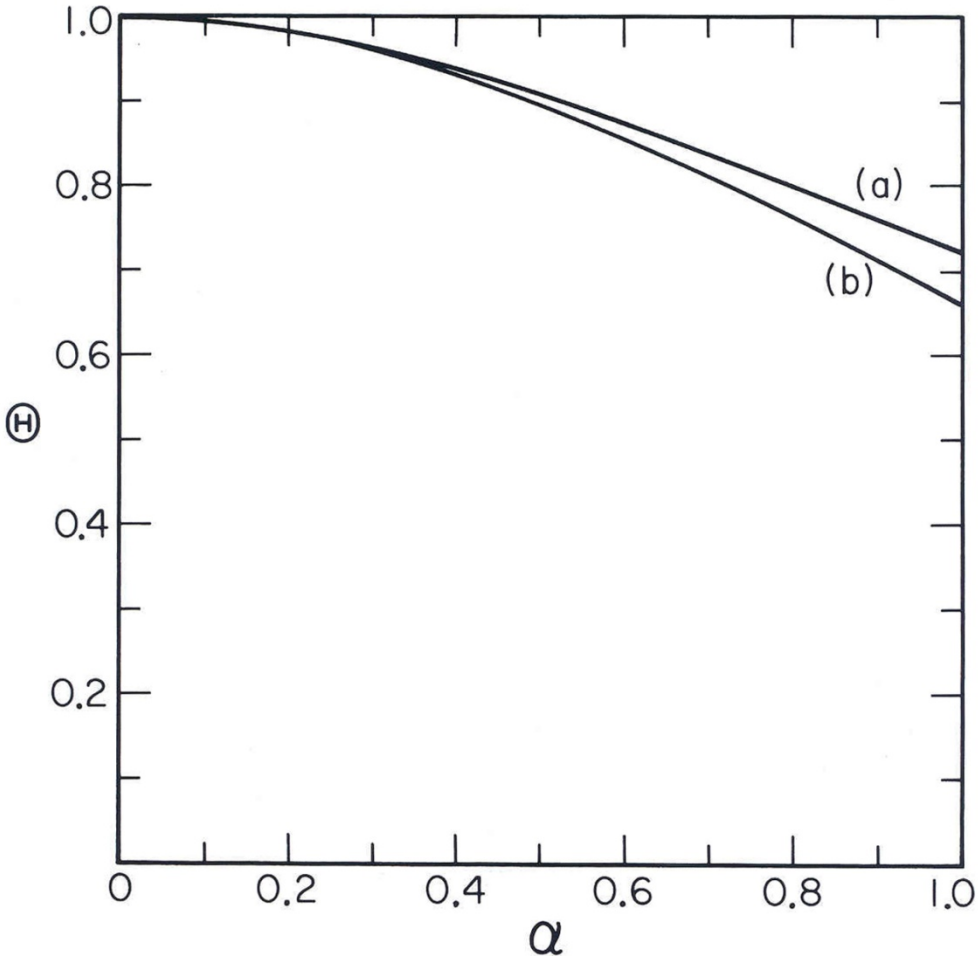

Velocity Acceptance for 2-Gap Structures

$$T(\beta) = \frac{\beta}{\beta_0} \frac{\sin\left(\frac{\pi\alpha}{2x_0}\frac{\beta_0}{\beta}\right)\sin\left(\frac{\pi}{2x_0}\frac{\beta_0}{\beta}\right)}{\sin\left(\frac{\pi\alpha}{2x_0}\right)\sin\left(\frac{\pi}{2x_0}\right)}$$

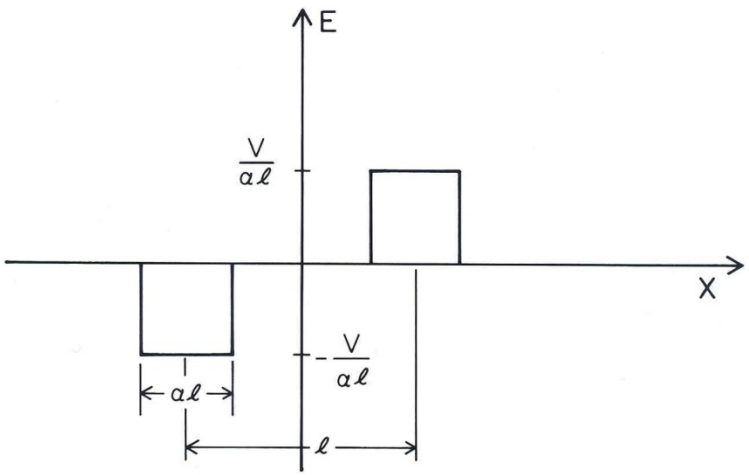

$$x_0 = \frac{\beta_0 \lambda}{2l}$$

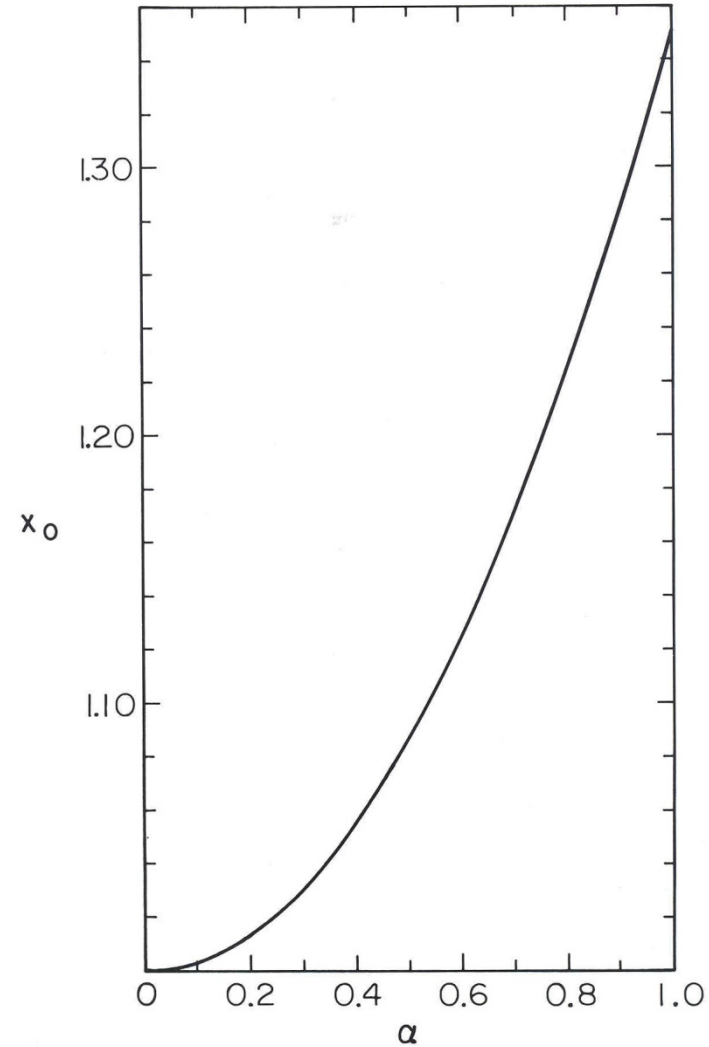

Velocity Acceptance for 3-Gap Structures

$$T(\beta) = \frac{\beta}{\beta_0} \frac{\sin\left(\frac{\pi\alpha}{3x_0}\frac{\beta_0}{\beta}\right)\left[\cos\left(\frac{\pi\alpha}{3x_0}\frac{\beta_0}{\beta}\right) - \cos\left(\frac{\pi}{x_0}\frac{\beta_0}{\beta}\right)\right]}{\sin\left(\frac{\pi\alpha}{3x_0}\right)\left[\cos\left(\frac{\pi\alpha}{3x_0}\right) - \cos\left(\frac{\pi}{x_0}\right)\right]}$$

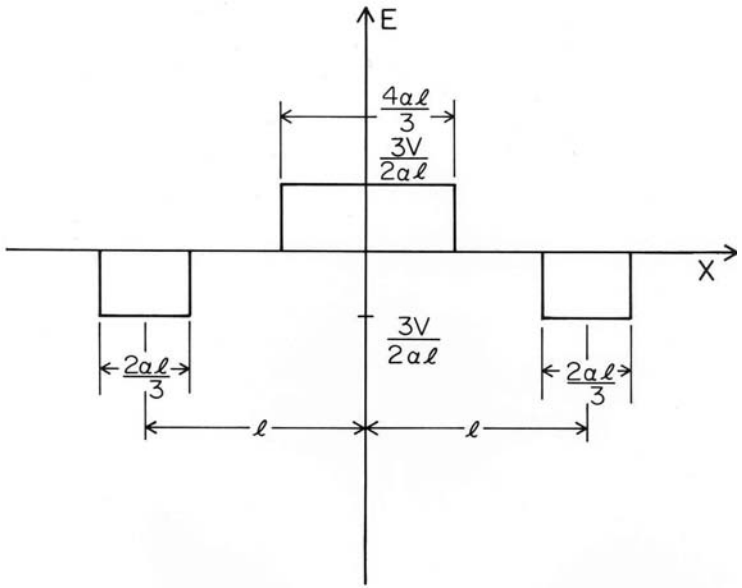

$$x_0 = \frac{\beta_0 \lambda}{2l}$$

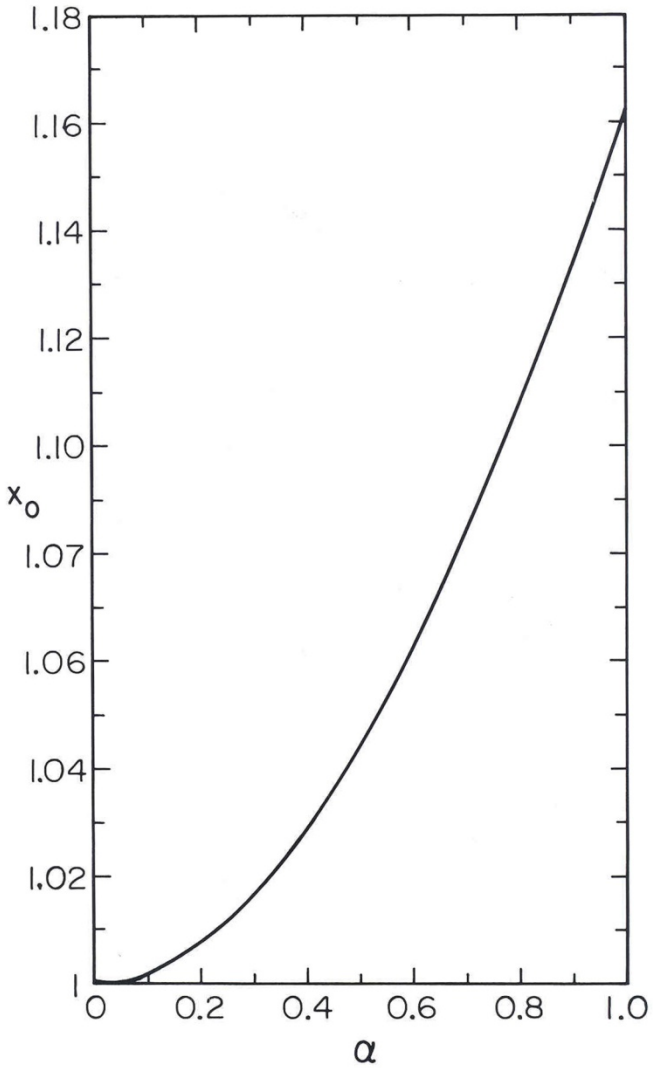

Higher-Order Effects

$$\Delta W = q\cos\phi\,\Delta W_0\,T(\beta) + \frac{\left(q\Delta W_0\right)^2}{W}\left[T^{(2)}(\beta) + \sin 2\phi\,T_s^{(2)}(\beta)\right]$$

$$T^{(2)}(k) = -\frac{k}{4}T(k)\frac{d}{dk}T(k) \qquad k = \omega/\beta c$$

$$T_s^{(2)}(k) = -\frac{k}{4\pi}\int_0^\infty \frac{T(k+k')T(k-k') - T(k)T(k)}{k'^2}dk'$$

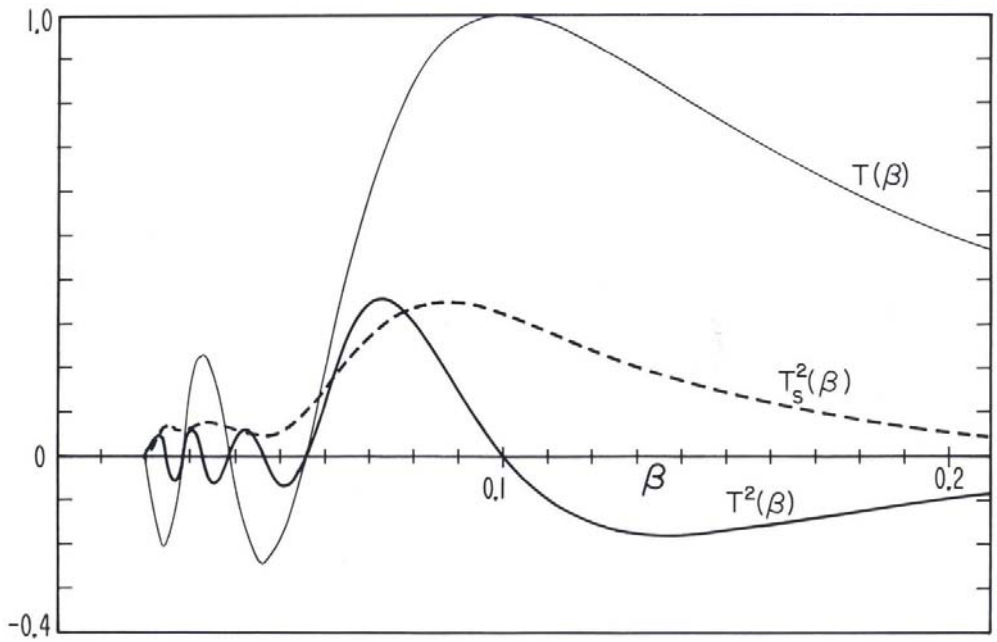

A Simple Model:
Loaded Quarter-wavelength Resonant Line

If characteristic length <<λ (β<0.5), separate the problem in two parts:

- Electrostatic model of high voltage region
- Transmission line

$$\varsigma = \frac{z}{\lambda / 4}$$

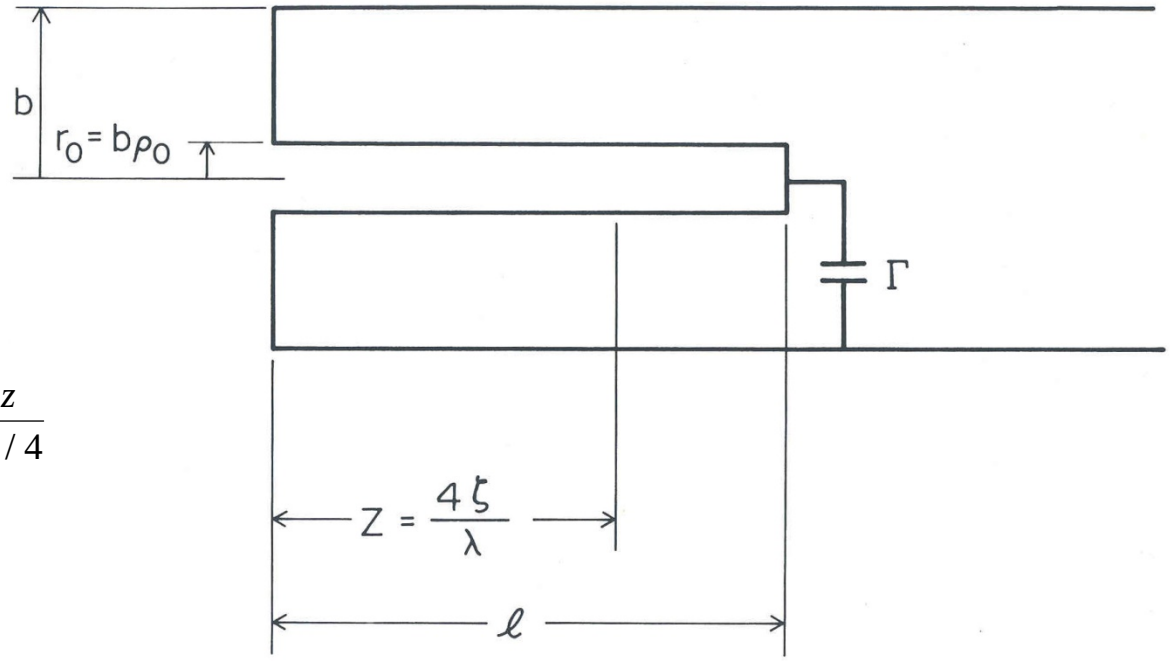

Basic Electrostatics

a: concentric spheres
b: sphere in cylinder
c: sphere between 2 planes
d: coaxial cylinders
e: cylinder between 2 planes

V_p : Voltage on center conductor
Outer conductor at ground
E_p: Peak field on center conductor

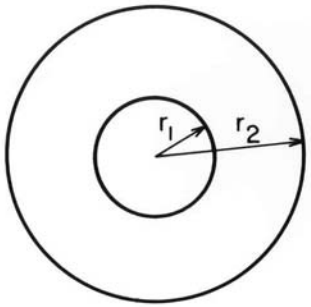

(a),(b),(d)

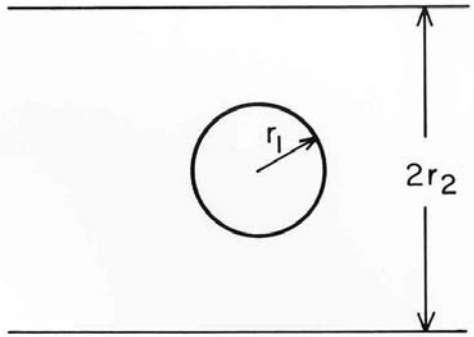

(c),(e)

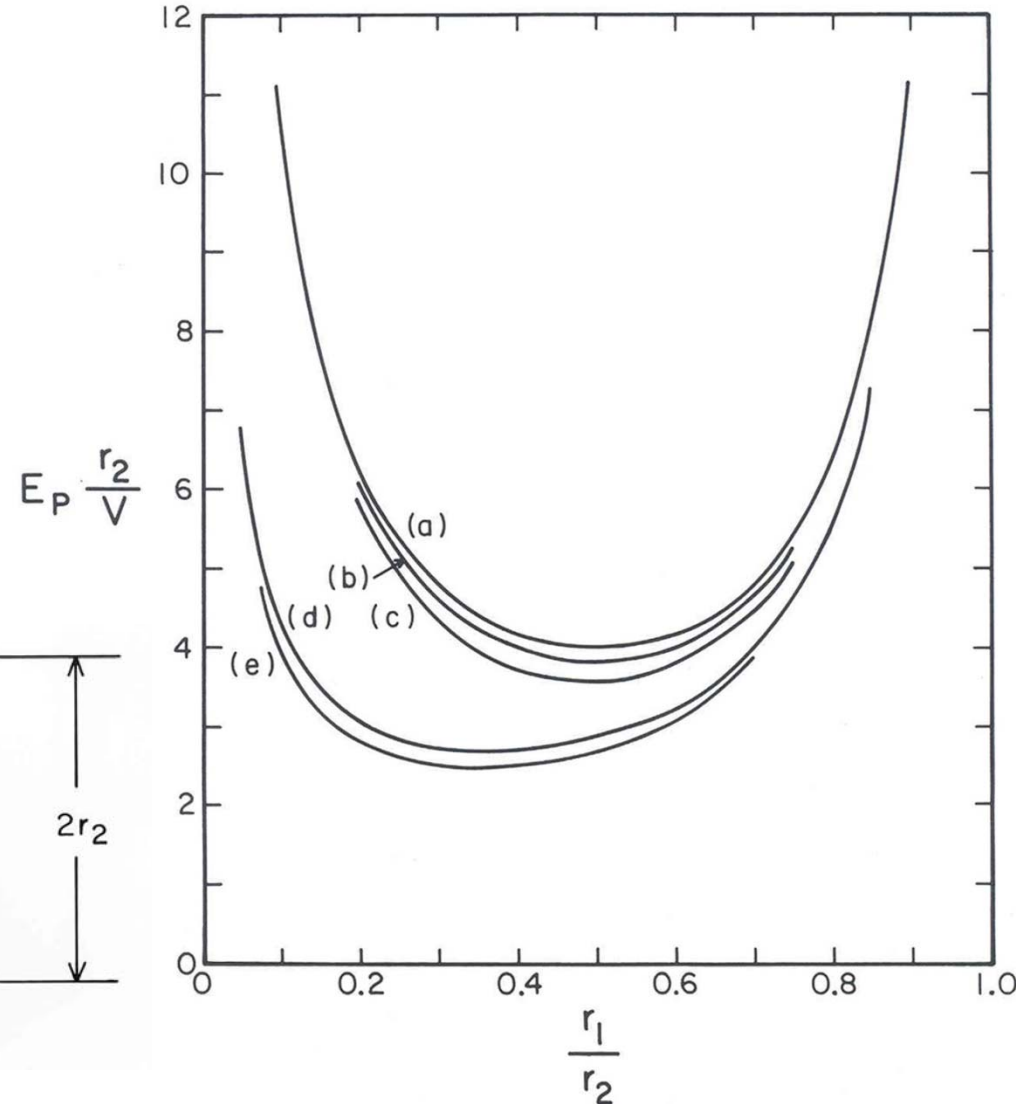

Loaded Quarter-wavelength Resonant Line

Capacitance per unit length

$$C = \frac{2\pi\varepsilon_0}{\ln\left(\frac{b}{r_0}\right)} = \frac{2\pi\varepsilon_0}{\ln\left(\frac{1}{\rho_0}\right)}$$

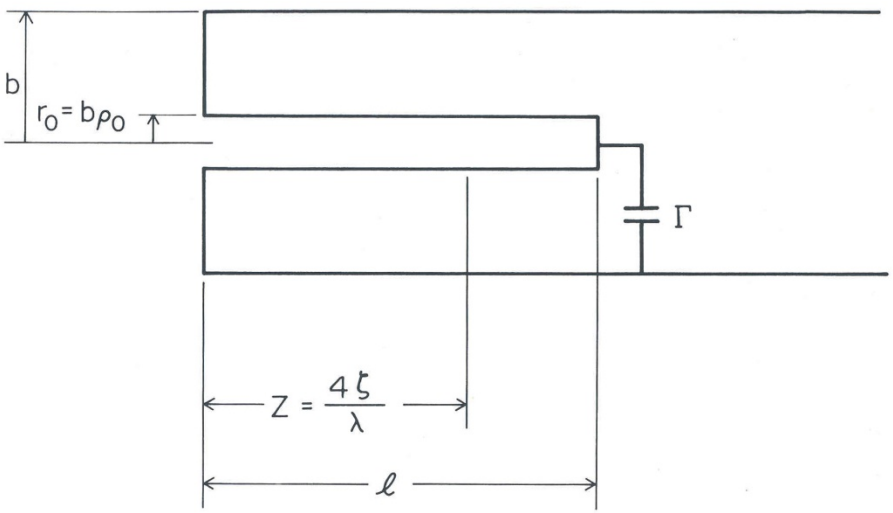

Inductance per unit length

$$L = \frac{\mu_0}{2\pi}\ln\left(\frac{b}{r_0}\right) = \frac{\mu_0}{2\pi}\ln\left(\frac{1}{\rho_0}\right)$$

Loaded Quarter-wavelength Resonant Line

Center conductor voltage

$$V(z) = V_0 \sin\left(\frac{2\pi}{\lambda} z\right)$$

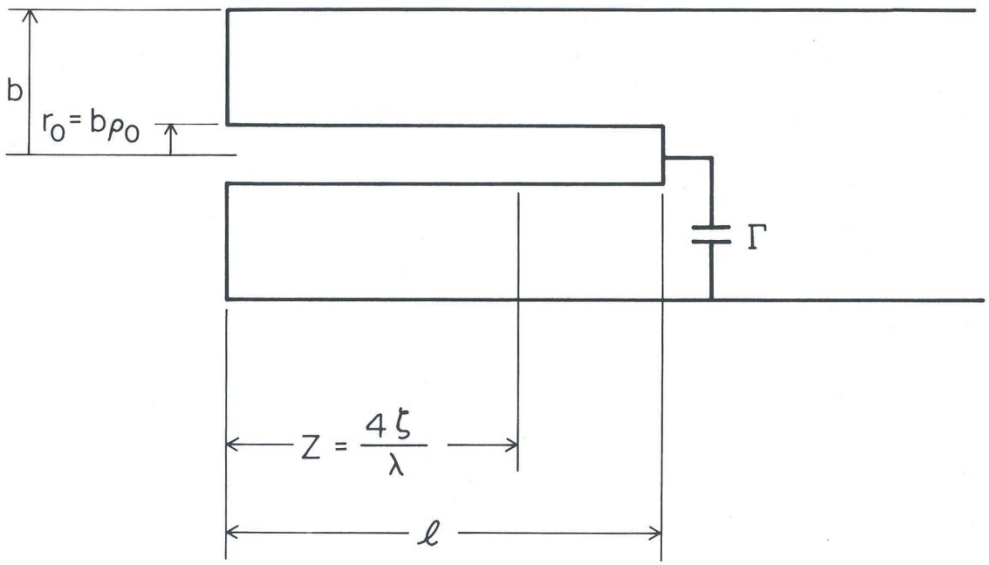

Center conductor current

$$I(z) = I_0 \cos\left(\frac{2\pi}{\lambda} z\right)$$

Line impedance

$$Z_0 = \frac{V_0}{I_0} = \frac{\eta}{2\pi} \ln\left(\frac{1}{\rho_0}\right), \qquad \eta = \sqrt{\frac{\mu_0}{\varepsilon_0}} \simeq 377\Omega$$

Loaded Quarter-wavelength Resonant Line

Loading capacitance

$$\Gamma(z) = \lambda\varepsilon \frac{\operatorname{cotan}\left(\frac{2\pi}{\lambda} z\right)}{\ln\left(1/r_0\right)} = \lambda\varepsilon \frac{\operatorname{cotan}\left(\frac{\pi}{2}\zeta\right)}{\ln\left(1/\rho_0\right)}$$

$$l = \frac{\lambda}{2\pi} \operatorname{Arctan}\left[\frac{\lambda\varepsilon}{\Gamma \ln\left(1/\rho_0\right)}\right]$$

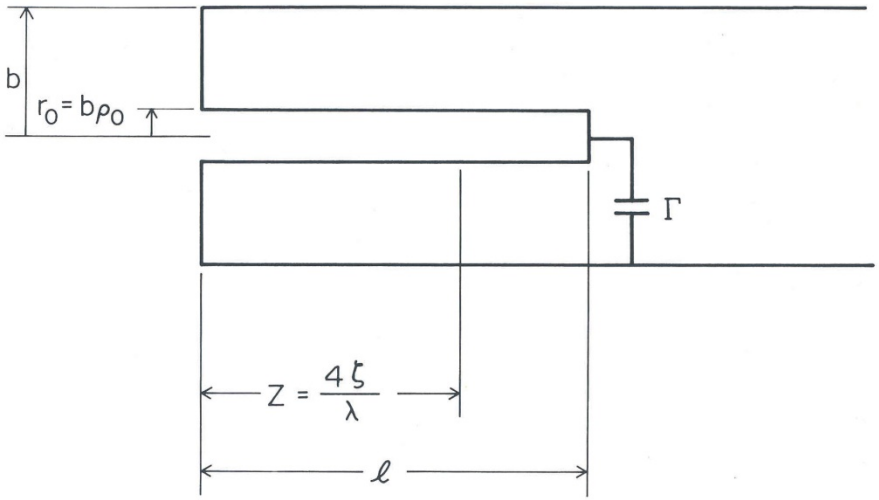

Loaded Quarter-wavelength Resonant Line

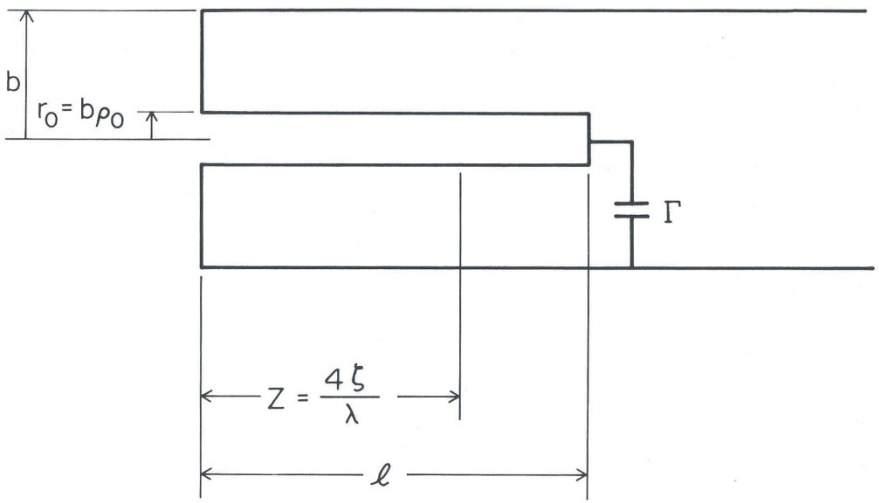

Peak magnetic field

$$\frac{V_p}{b} = \begin{Bmatrix} \eta & H \\ c & B \\ 300 & B \end{Bmatrix} \rho_0 \ln\left(\frac{1}{\rho_0}\right) \sin\left(\frac{\pi}{2}\zeta\right) \qquad \begin{Bmatrix} \text{m, A/m} \\ \text{m, T} \\ \text{cm, G} \end{Bmatrix}$$

V_p: Voltage across loading capacitance

$B \simeq 9$ mT at 1 MV/m

Loaded Quarter-wavelength Resonant Line

Power dissipation (ignore losses in the shorting plate)

$$P = V_p^2 \frac{\pi}{8} \frac{R_s}{\eta^2} \frac{\lambda}{b} \frac{1+1/\rho_0}{\ln^2 \rho_0} \frac{\zeta + \frac{1}{\pi}\sin \pi\zeta}{\sin^2 \frac{\pi}{2}\zeta}$$

$$P \propto \frac{R_s}{\eta^2} E^2 \beta \lambda^2$$

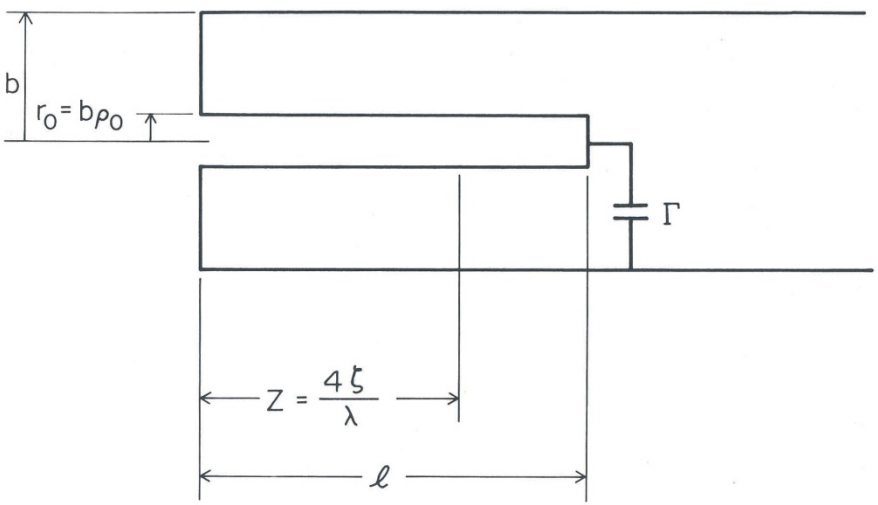

Loaded Quarter-wavelength Resonant Line

Energy content

$$U = V_p^2 \frac{\pi\varepsilon_0}{8} \lambda \frac{1}{\ln\left(1/\rho_0\right)} \frac{\zeta + \frac{1}{\pi}\sin \pi\zeta}{\sin^2 \frac{\pi}{2}\zeta}$$

$$U \propto \varepsilon_0 E^2 \beta^2 \lambda^3$$

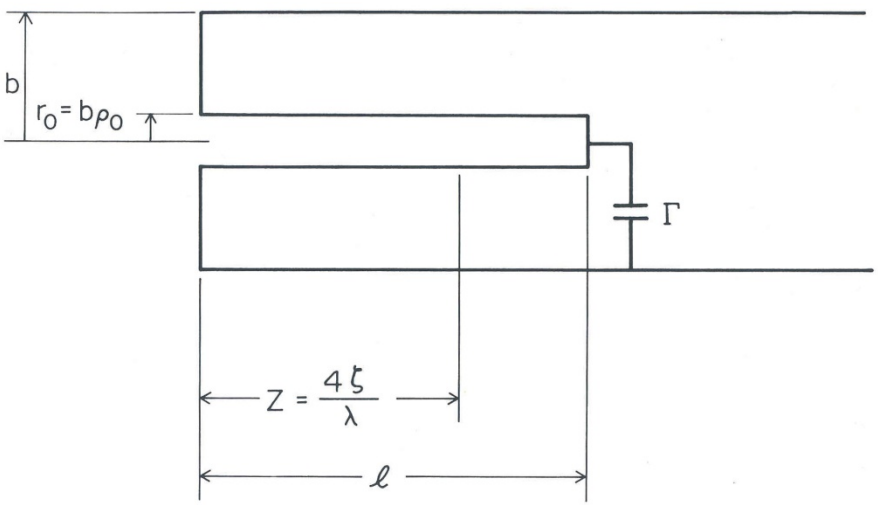

Loaded Quarter-wavelength Resonant Line

Geometrical factor

$$G = QR_s = 2\pi\,\eta\,\frac{b}{\lambda}\,\frac{\ln\left(1/\rho_0\right)}{1+1/\rho_0}$$

$$G \propto \eta\,\beta$$

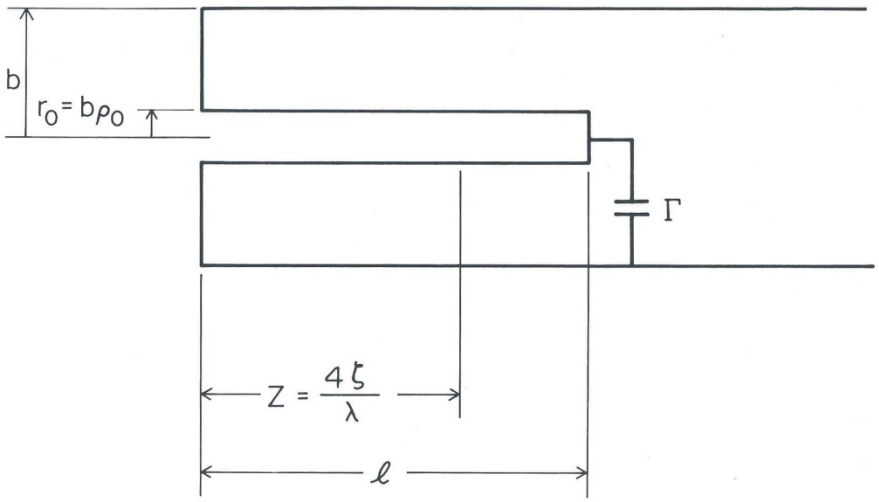

Loaded Quarter-wavelength Resonant Line

Shunt impedance $\left(4V_p^2 / P\right)$

$$R_{sh} = \frac{\eta^2}{R_s}\frac{32}{\pi}\frac{b}{\lambda}\frac{\ln^2\rho_0}{1+1/\rho_0}\frac{\sin^2\frac{\pi}{2}\zeta}{\zeta+\frac{1}{\pi}\sin\pi\zeta}$$

$$R_{sh}\ R_s \propto \eta^2\ \beta$$

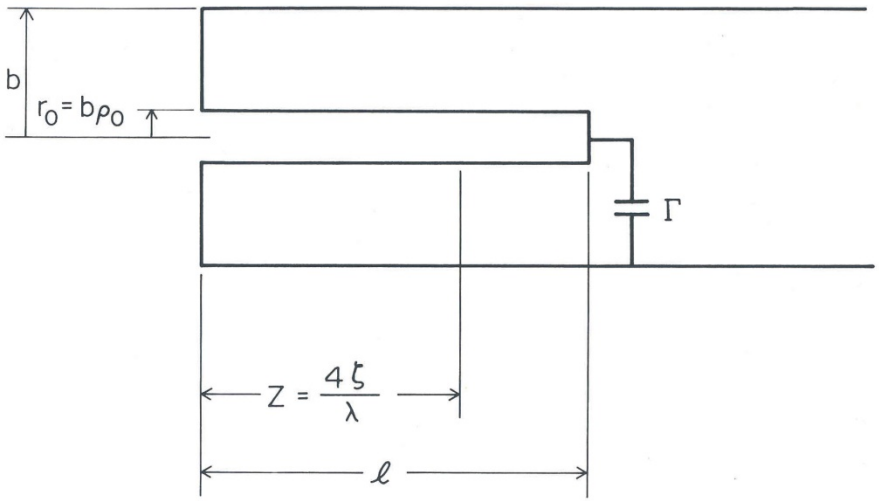

Loaded Quarter-wavelength Resonant Line

R/Q

$$\frac{R_{sh}}{Q} = \frac{16}{\pi^2}\eta \ln\left(1/\rho_0\right)\frac{\sin^2\frac{\pi}{2}\zeta}{\zeta + \frac{1}{\pi}\sin\pi\zeta}$$

$$\frac{R_{sh}}{Q} \propto \eta$$

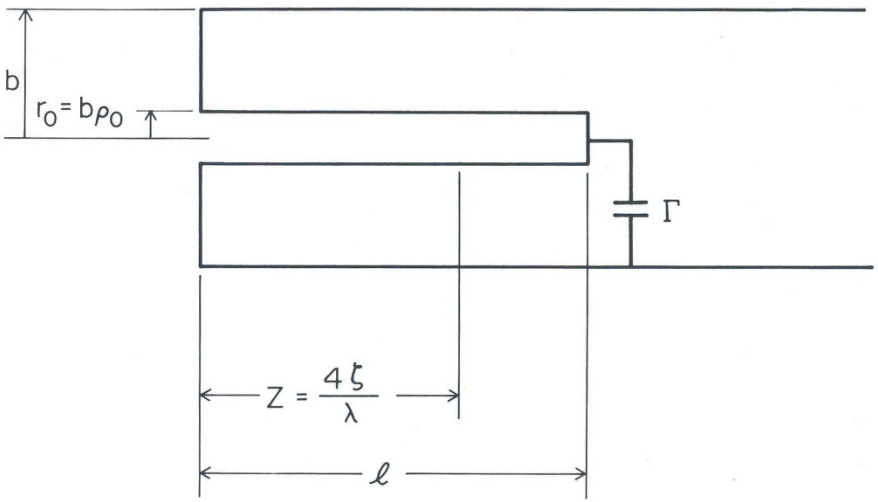

Loaded Quarter-wavelength Resonant Line

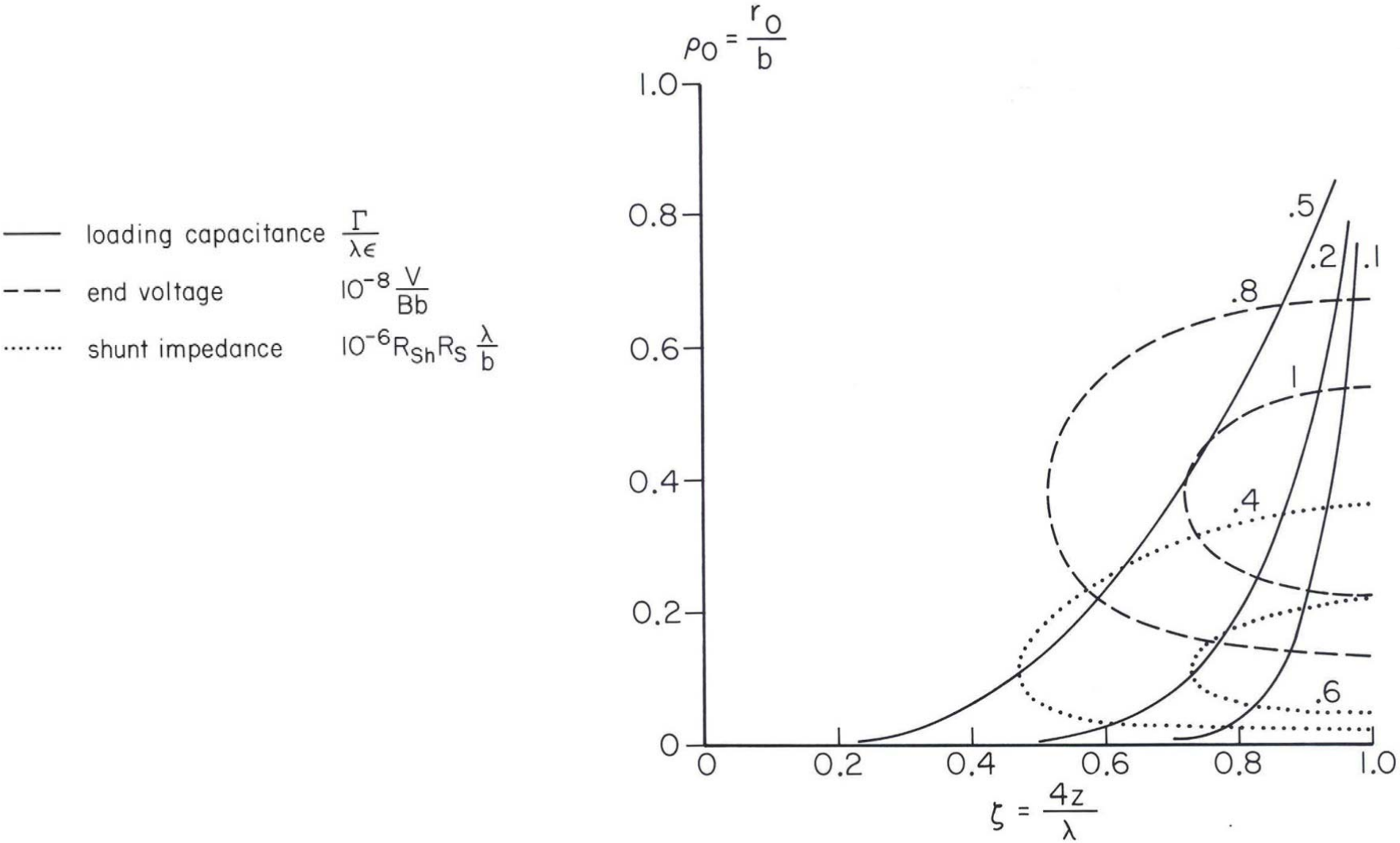

Loaded Quarter-wavelength Resonant Line

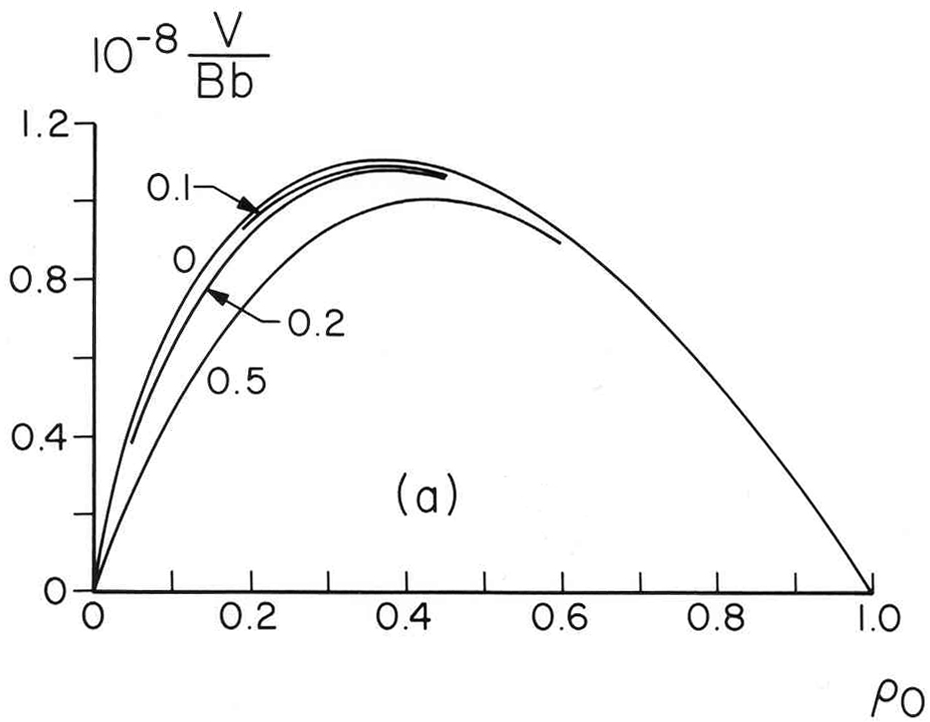

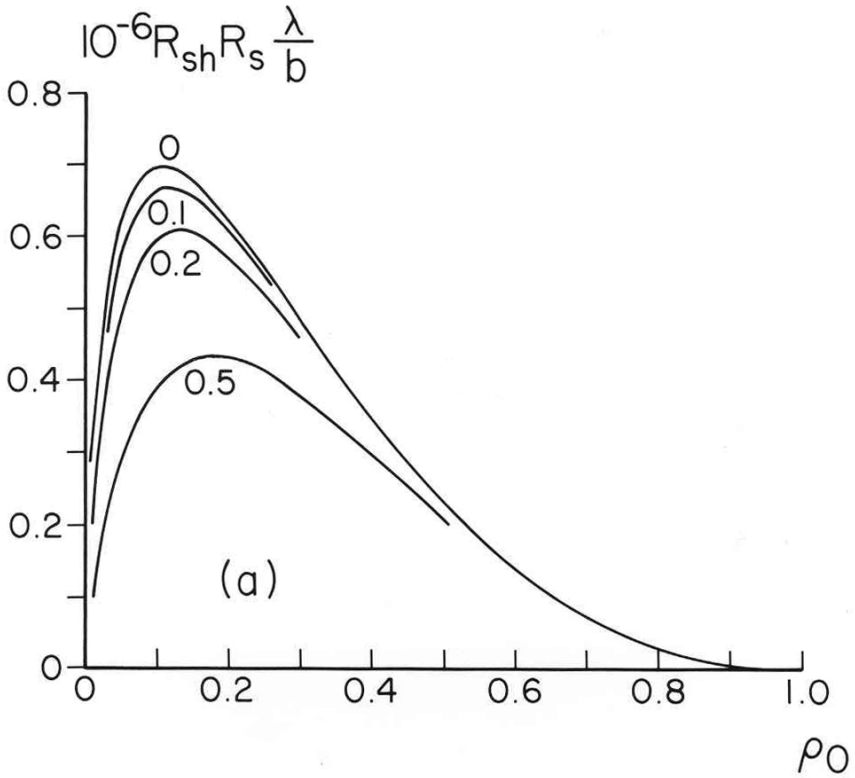

MKS units, lines of constant normalized loading capacitance $\Gamma/\lambda\varepsilon_0$

More Complicated Center Conductor Geometries

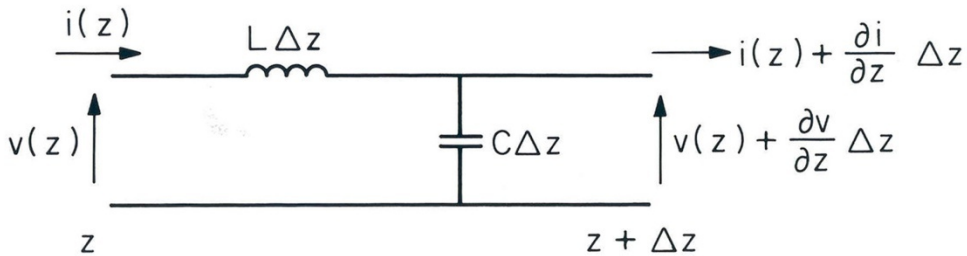

$$\frac{d^2 v}{d\zeta^2} - \frac{1}{\rho \ln \rho}\frac{d\rho}{d\zeta}\frac{dv}{d\zeta} + \frac{\pi^2}{4} v = 0$$

$$\frac{d^2 i}{d\zeta^2} + \frac{1}{\rho \ln \rho}\frac{d\rho}{d\zeta}\frac{di}{d\zeta} + \frac{\pi^2}{4} i = 0$$

$$\Gamma(z) = -C(z)\frac{i(z)}{di/dz}$$

More Complicated Center Conductor Geometries

Constant logarithmic derivative of line capacitance

Good model for linear taper

$$\frac{1}{C}\frac{dC}{dz} = -\frac{1}{d} \qquad r(z) = b\left(\frac{r_0}{b}\right)^{\exp(z/d)}$$

Constant surface magnetic field

$$i(z) \propto r(z)$$

$$\frac{d^2 r}{dz^2} - \frac{1}{r\ln(b/r)}\left(\frac{dr}{dz}\right)^2 + \frac{4\pi^2}{\lambda^2} r = 0$$

Profile of Constant Surface Magnetic Field

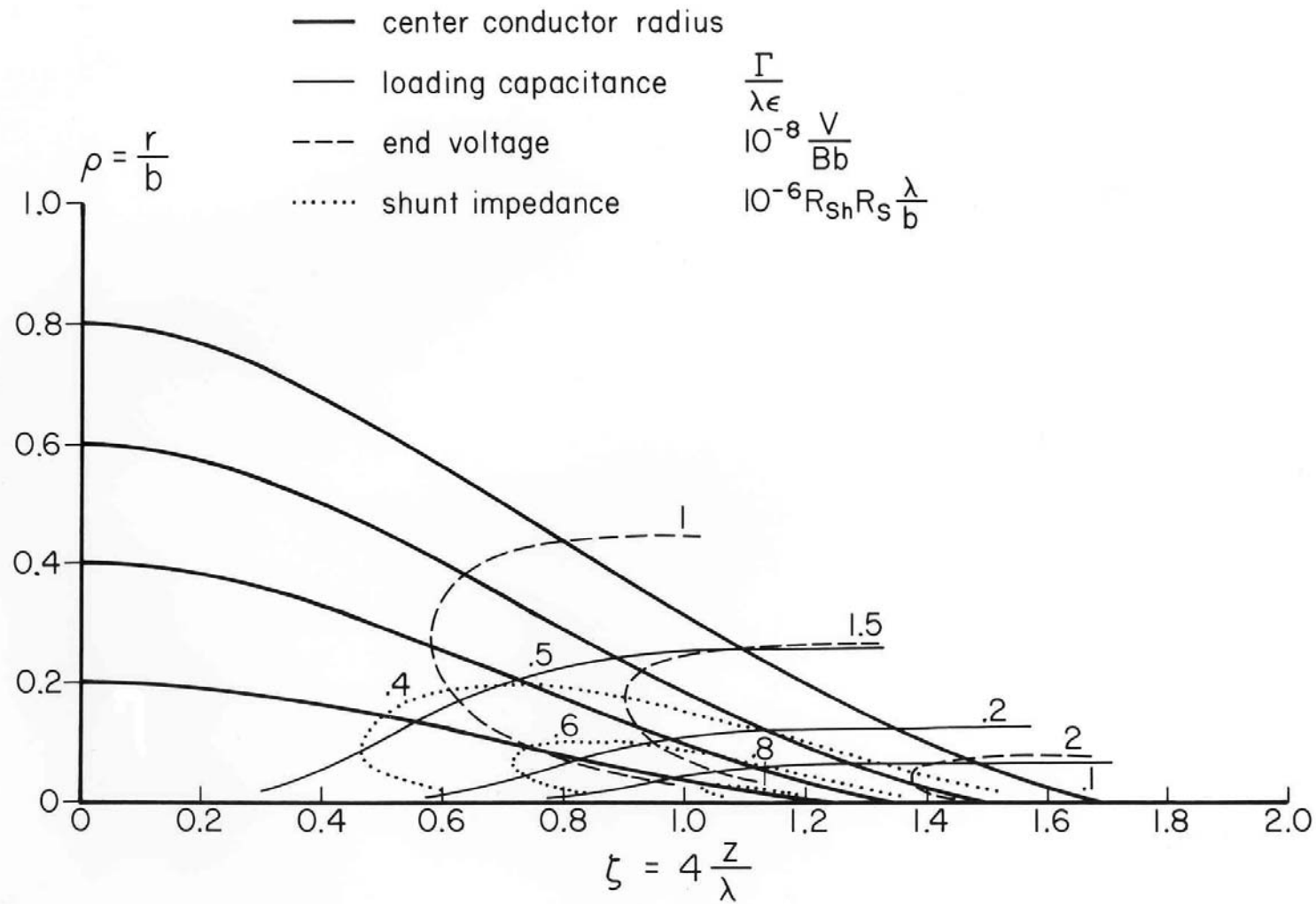

Profile of Constant Surface Magnetic Field

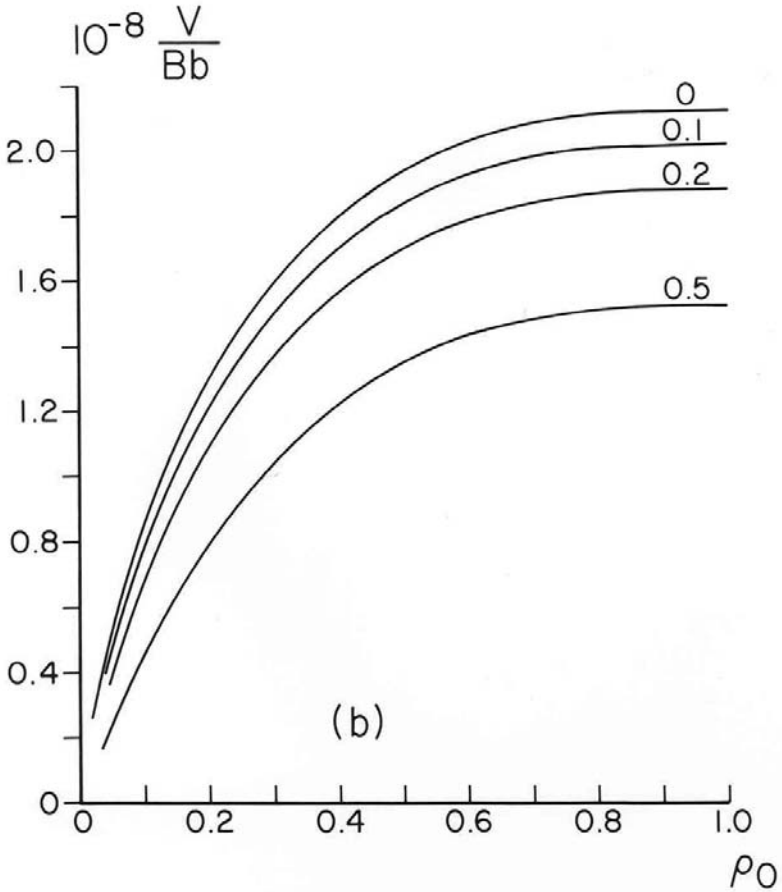

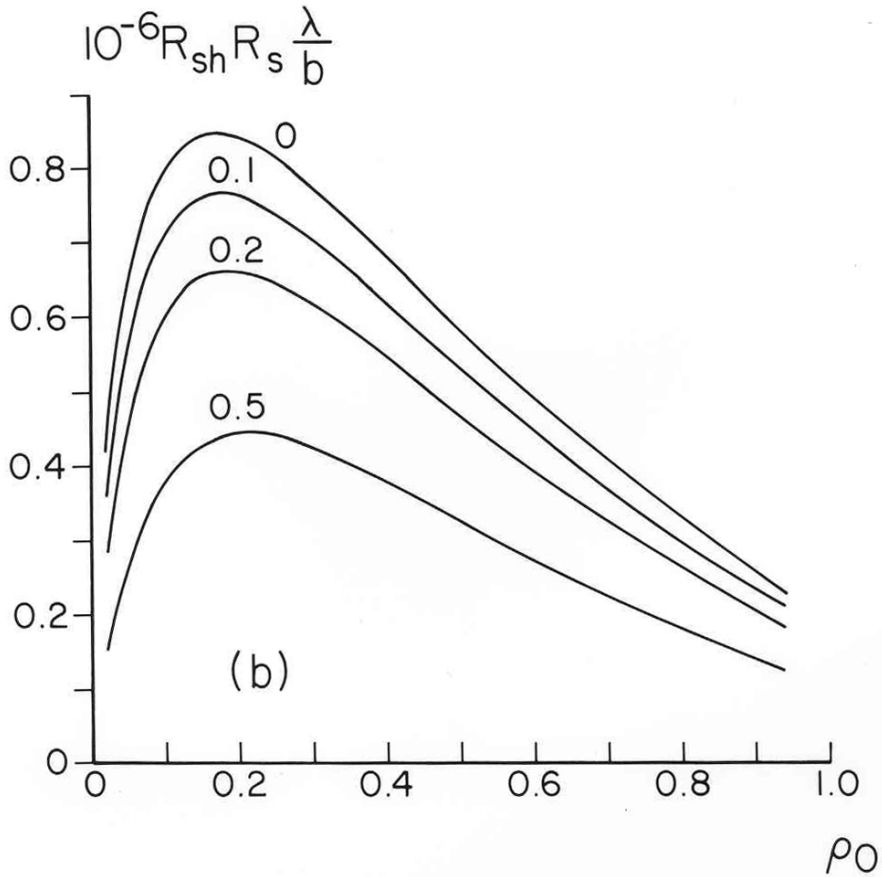

MKS units, lines of constant normalized loading capacitance $\Gamma/\lambda\varepsilon_0$

Another Simple Model: Coaxial Half-wave Resonator

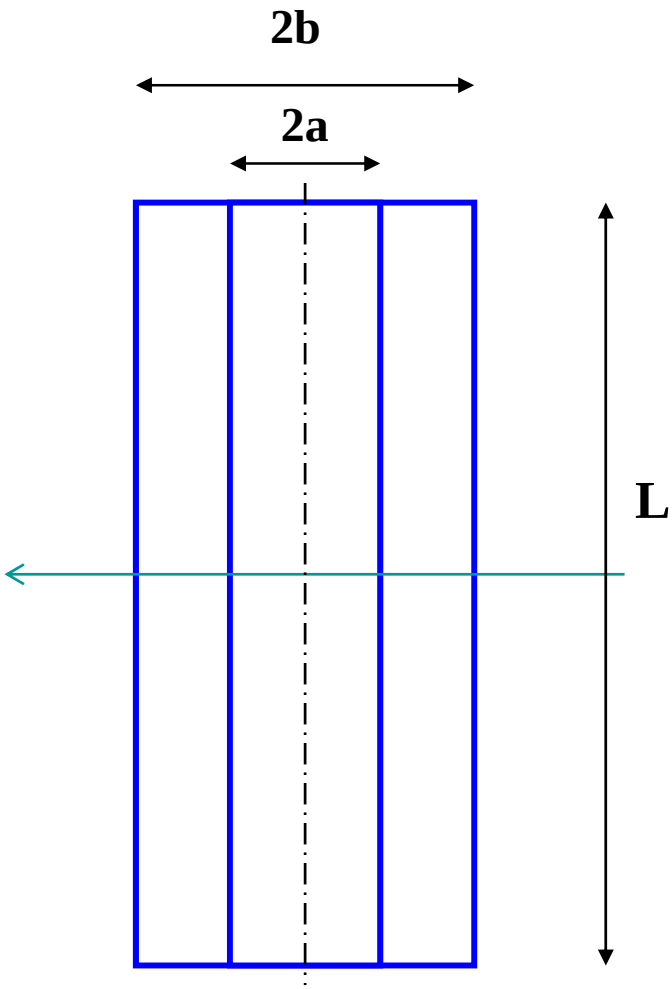

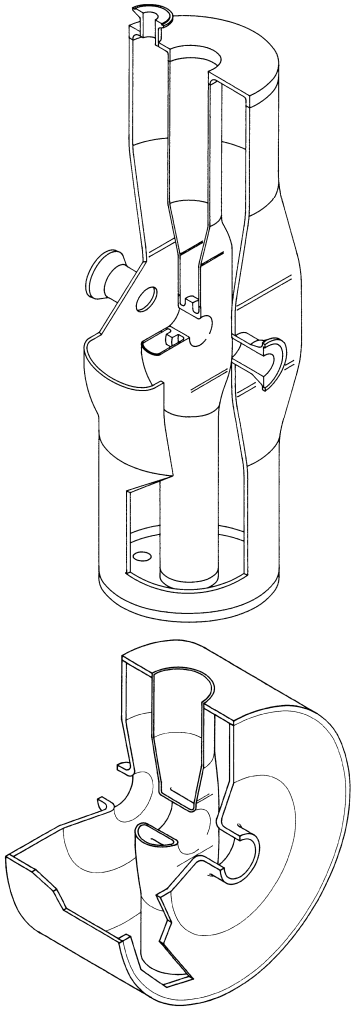

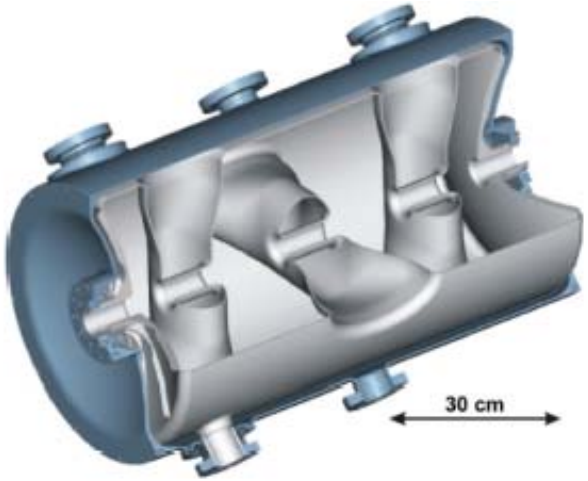

Coaxial Half-wave Resonator

Capacitance per unit length

$$C = \frac{2\pi\varepsilon_0}{\ln\left(\frac{b}{a}\right)} = \frac{2\pi\varepsilon_0}{\ln\left(\frac{1}{\rho_0}\right)}$$

Inductance per unit length

$$L = \frac{\mu_0}{2\pi}\ln\left(\frac{b}{r_0}\right) = \frac{\mu_0}{2\pi}\ln\left(\frac{1}{\rho_0}\right)$$

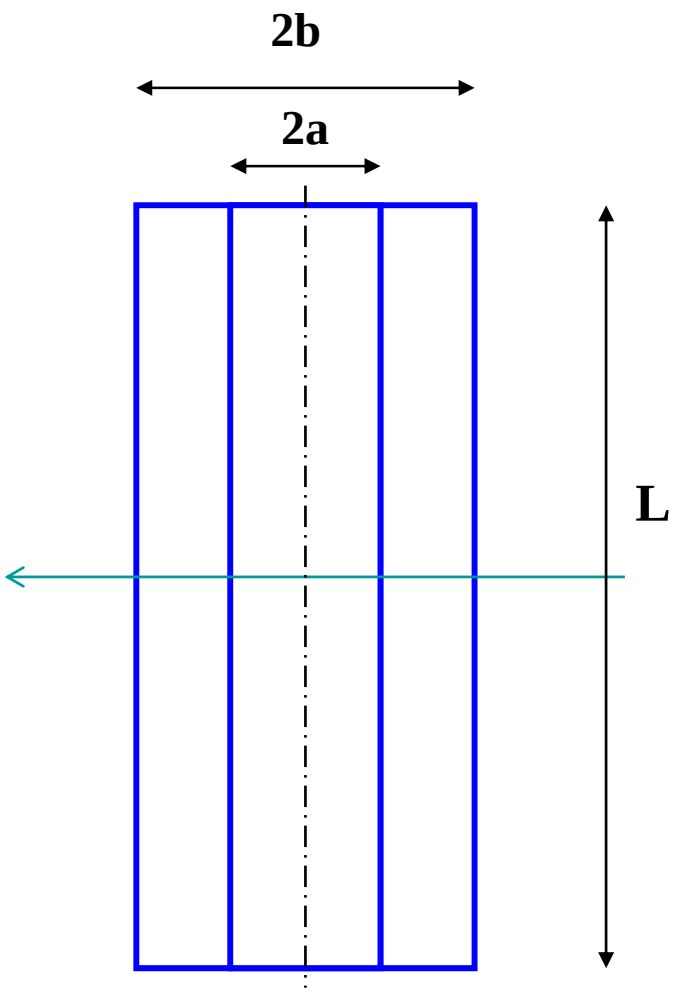

Coaxial Half-wave Resonator

Center conductor voltage

$$V(z) = V_0 \cos\left(\frac{2\pi}{\lambda} z\right)$$

Center conductor current

$$I(z) = I_0 \sin\left(\frac{2\pi}{\lambda} z\right)$$

Line impedance

$$Z_0 = \frac{V_0}{I_0} = \frac{\eta}{2\pi} \ln\left(\frac{1}{\rho_0}\right), \qquad \eta = \sqrt{\frac{\mu_0}{\varepsilon_0}} \simeq 377\Omega$$

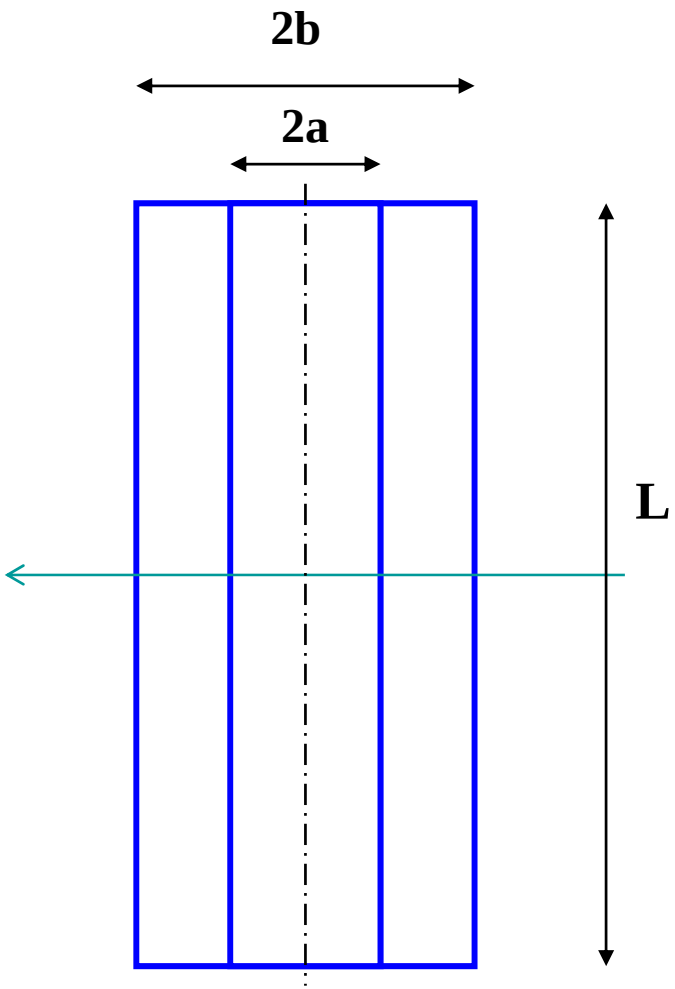

Coaxial Half-wave Resonator

Peak Electric Field

d: coaxial cylinders

V_p : Voltage on center conductor
Outer conductor at ground
E_p: Peak field on center conductor

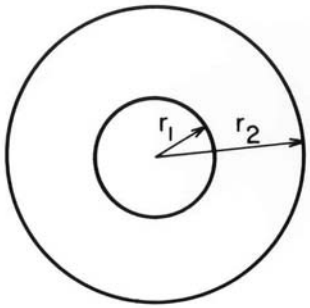

(a), (b), (d)

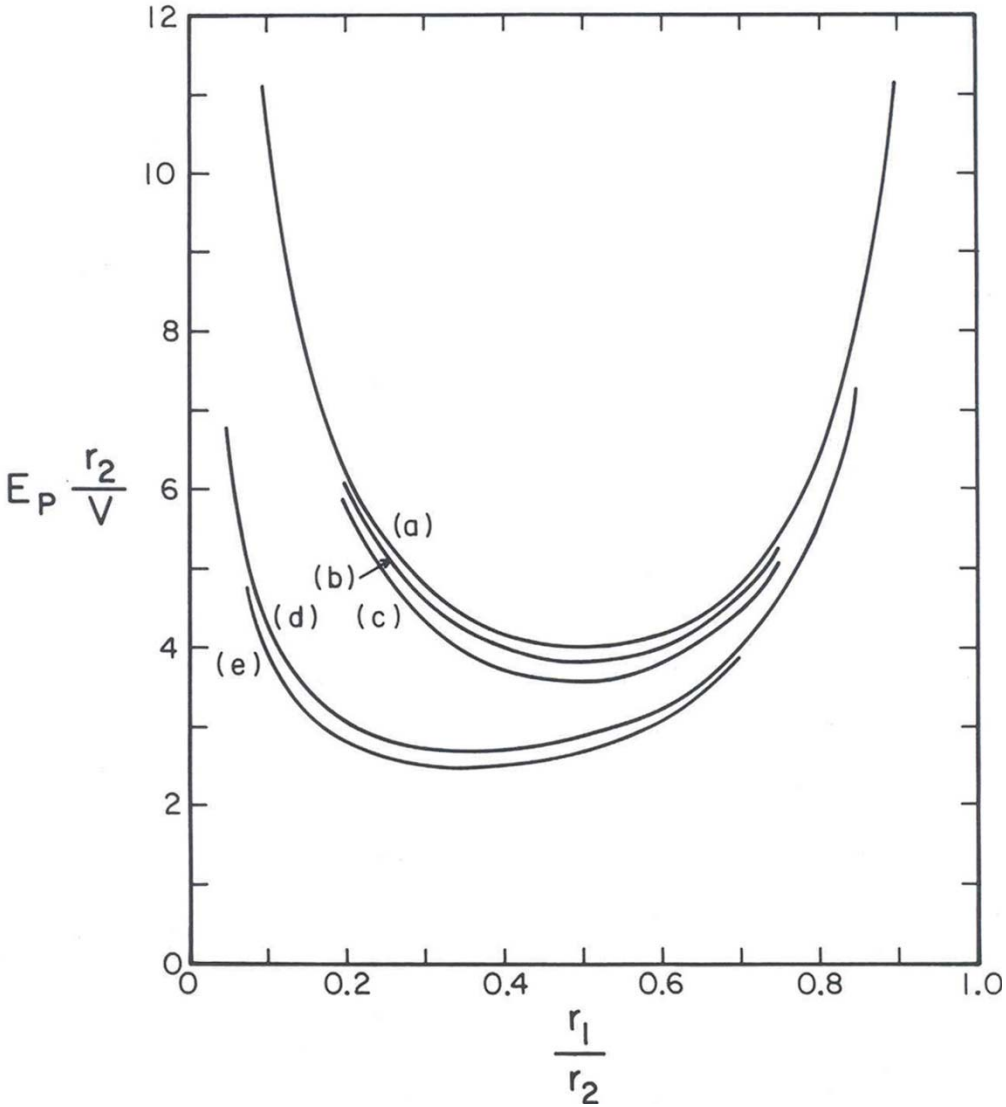

Coaxial Half-wave Resonator

Peak magnetic field

$$\frac{V_p}{b} = \begin{Bmatrix} \eta & H \\ c & B \\ 300 & B \end{Bmatrix} \rho_0 \ln\left(\frac{1}{\rho_0}\right) \qquad \begin{Bmatrix} \text{m, A/m} \\ \text{m, T} \\ \text{cm, G} \end{Bmatrix}$$

V_p: Voltage across loading capacitance

$B \simeq 9$ mT at 1 MV/m

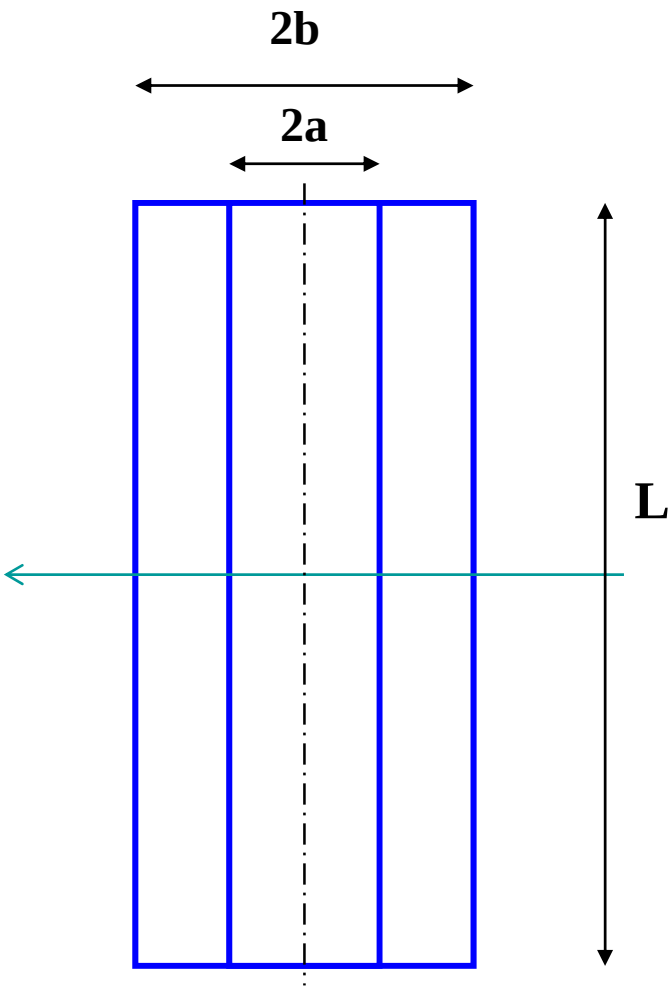

Coaxial Half-wave Resonator

Power dissipation (ignore losses in the shorting plate)

$$P = V_p^2 \frac{\pi}{4} \frac{R_s}{\eta^2} \frac{\lambda}{b} \frac{1+1/\rho_0}{\ln^2 \rho_0}$$

$$P \propto \frac{R_s}{\eta^2} E^2 \beta \lambda^2$$

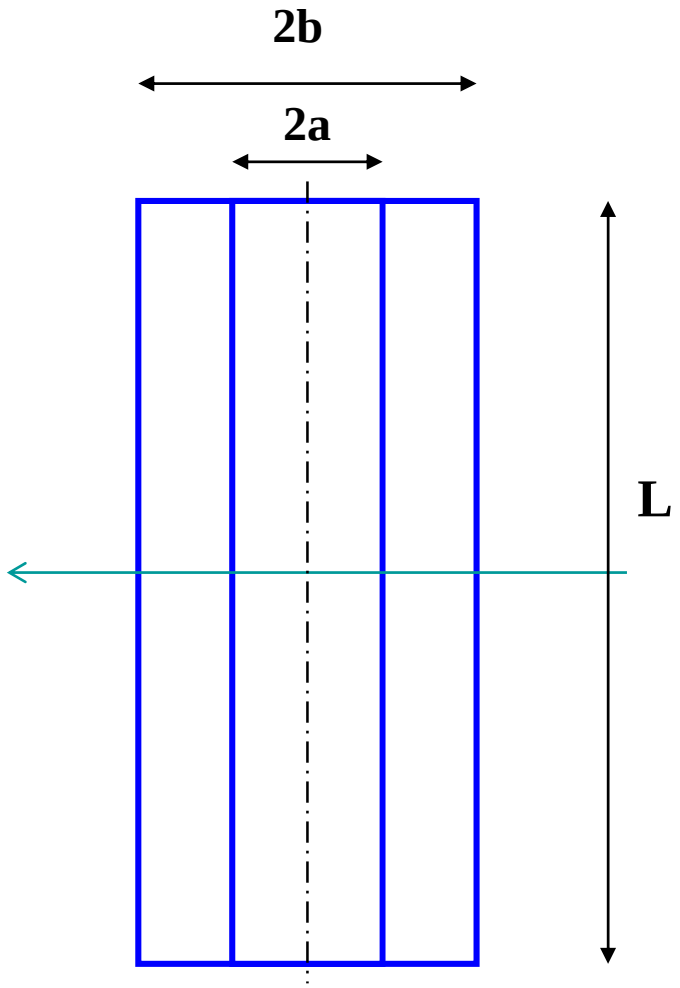

Coaxial Half-wave Resonator

Energy content

$$U = V_p^2 \frac{\pi \varepsilon_0}{4} \lambda \frac{1}{\ln\left(1/\rho_0\right)}$$

$$U \propto \varepsilon_0 E^2 \beta^2 \lambda^3$$

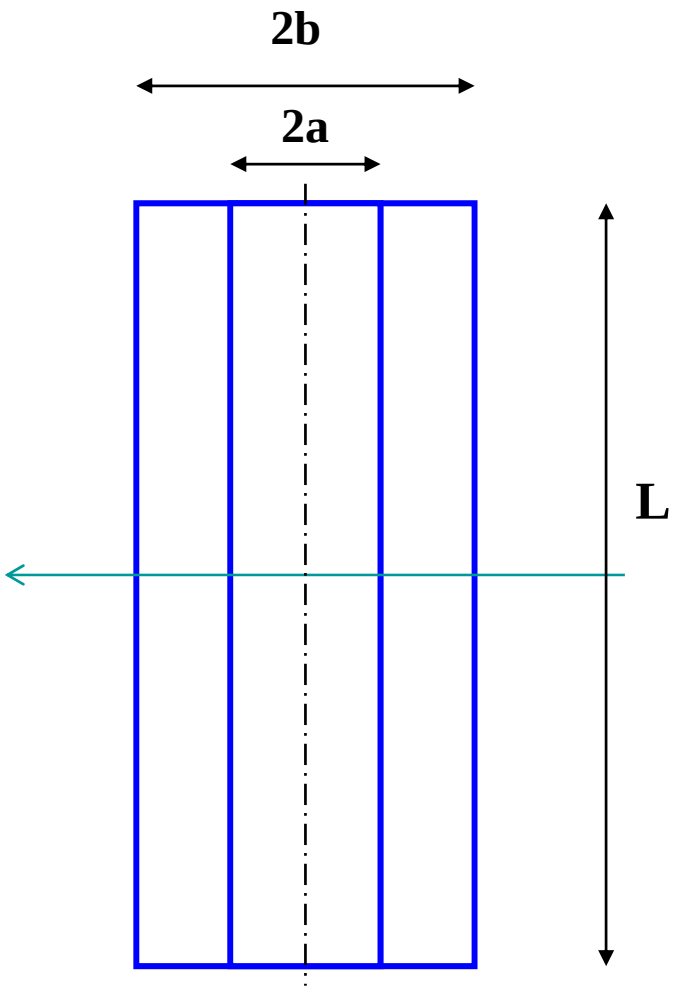

Coaxial Half-wave Resonator

Geometrical factor

$$G = QR_s = 2\pi\,\eta\,\frac{b}{\lambda}\,\frac{\ln\left(1/\rho_0\right)}{1+1/\rho_0}$$

$$G \propto \eta\,\beta$$

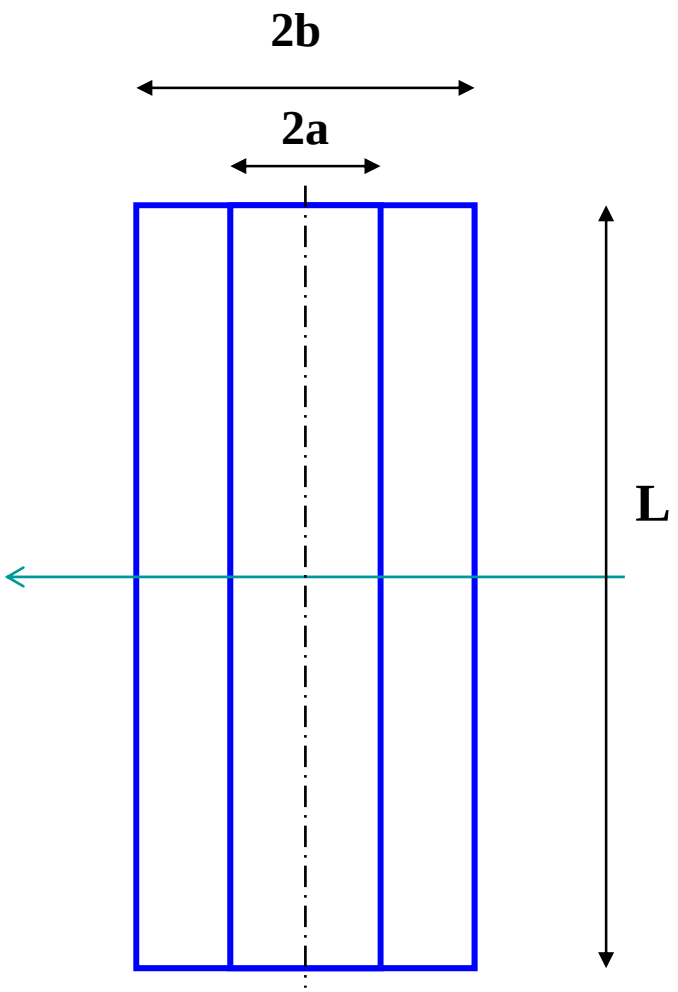

Coaxial Half-wave Resonator

Shunt impedance $\left(4V_p^2 / P\right)$

$$R_{sh} = \frac{\eta^2}{R_s}\frac{16}{\pi}\frac{b}{\lambda}\frac{\ln^2 \rho_0}{1+1/\rho_0}$$

$$R_{sh}\ R_s \propto \eta^2\ \beta$$

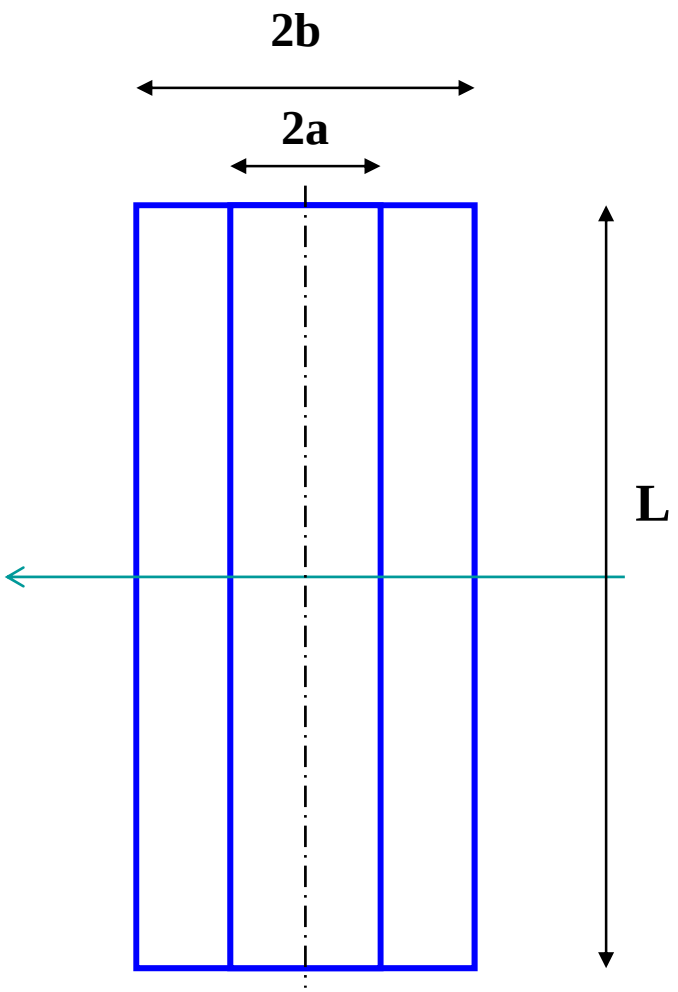

Coaxial Half-wave Resonator

R/Q

$$\frac{R_{sh}}{Q} = \frac{8}{\pi^2}\eta \ln\left(1/\rho_0\right)$$

$$\frac{R_{sh}}{Q} \propto \eta$$

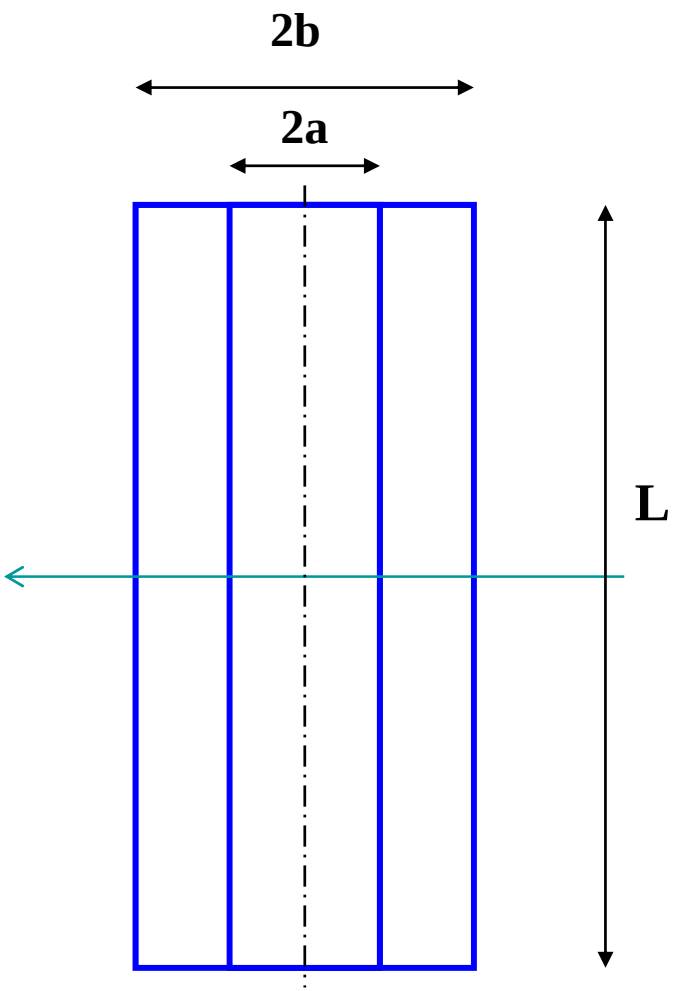

Some Real Geometries ($\lambda/4$)

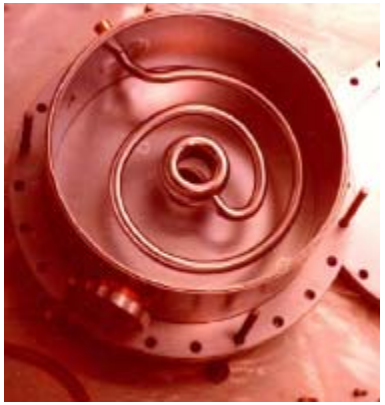

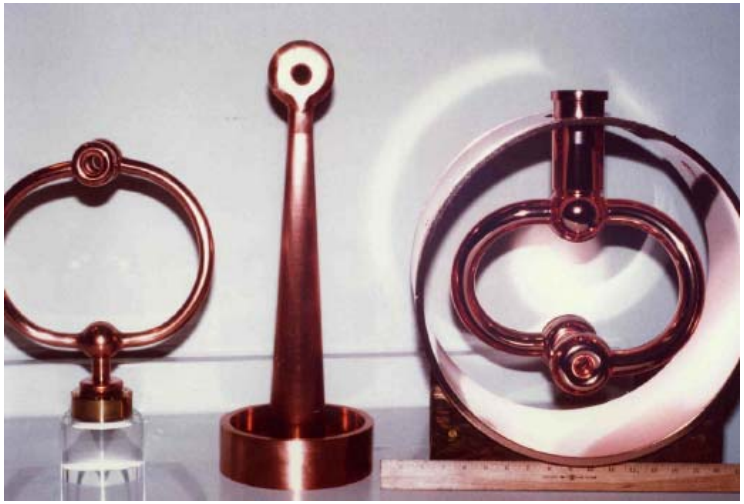

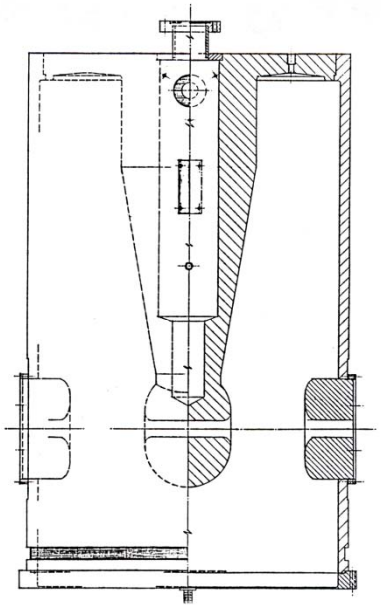

Some Real Geometries (λ/4)

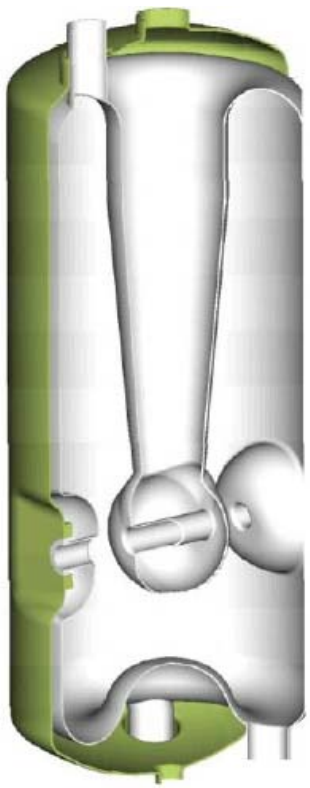

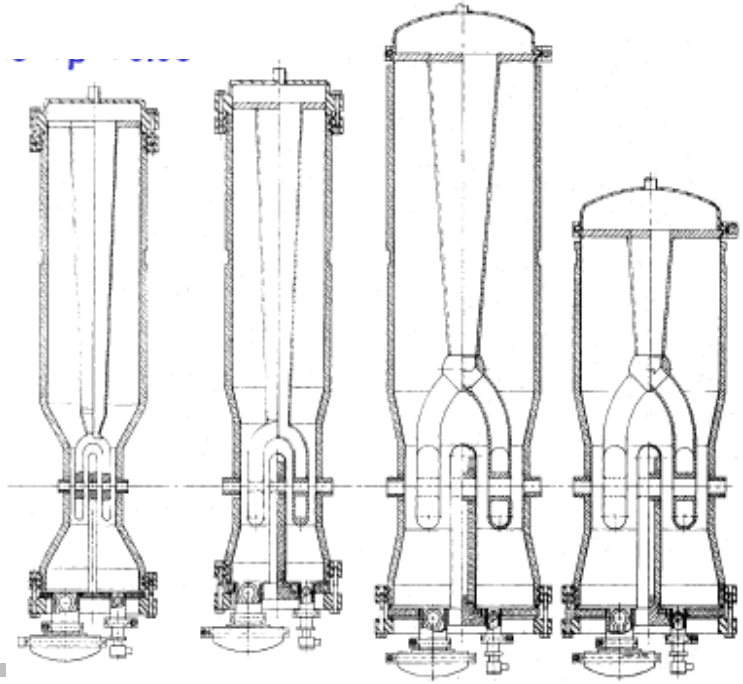

λ/4 Resonant Lines

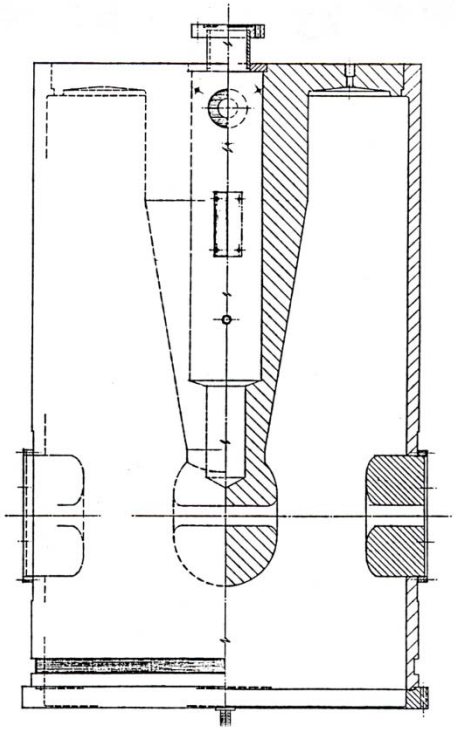

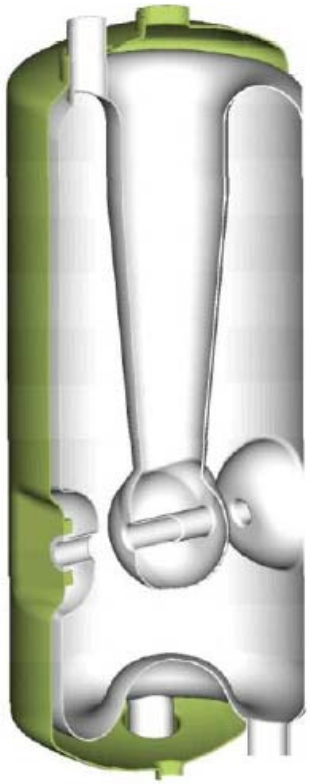

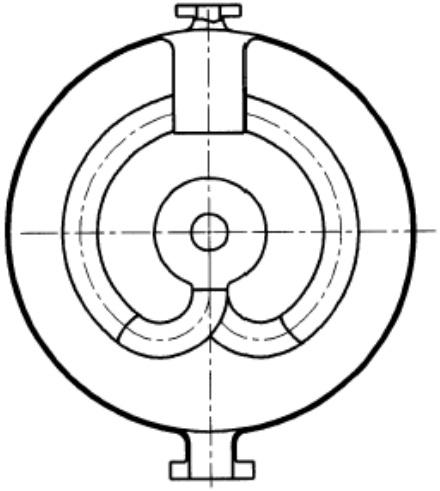

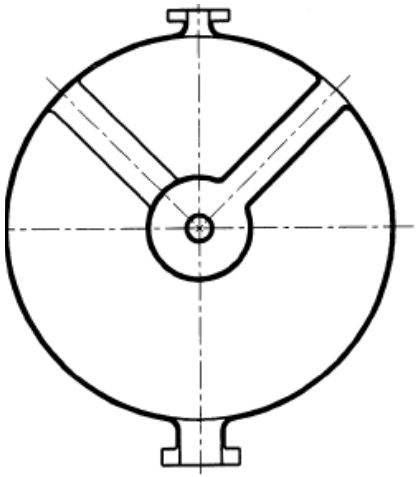

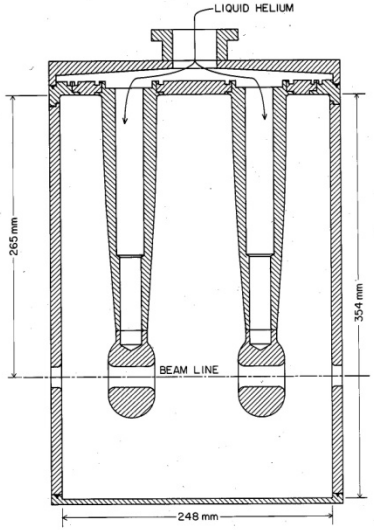

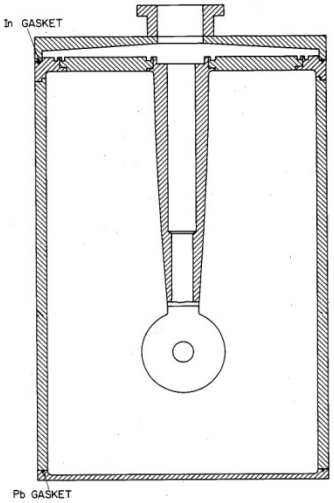

λ/2 Resonant Lines

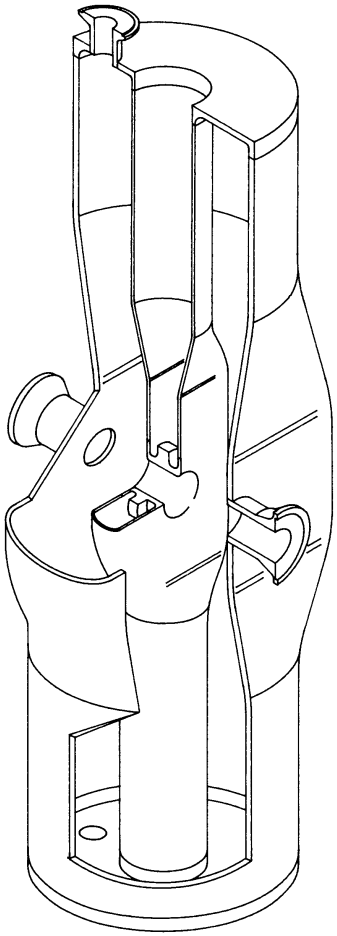

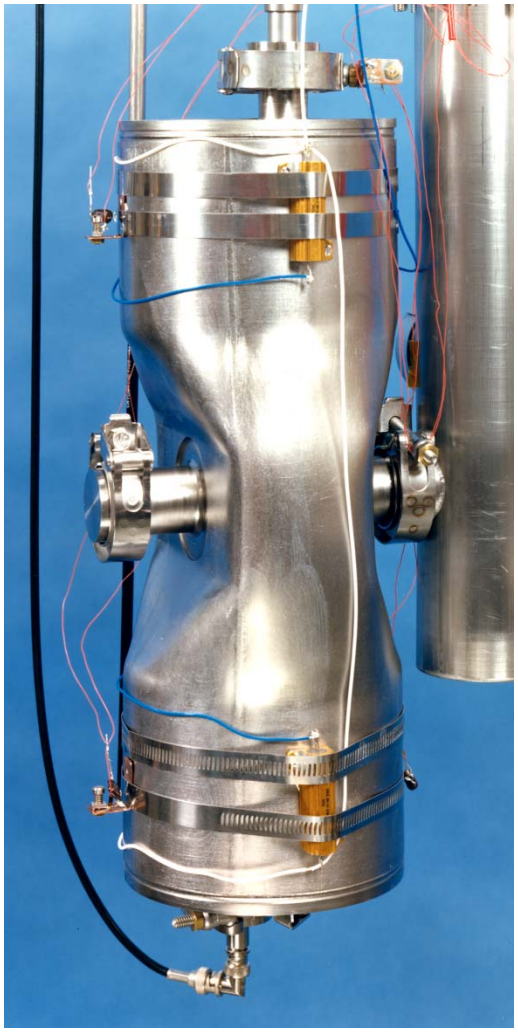

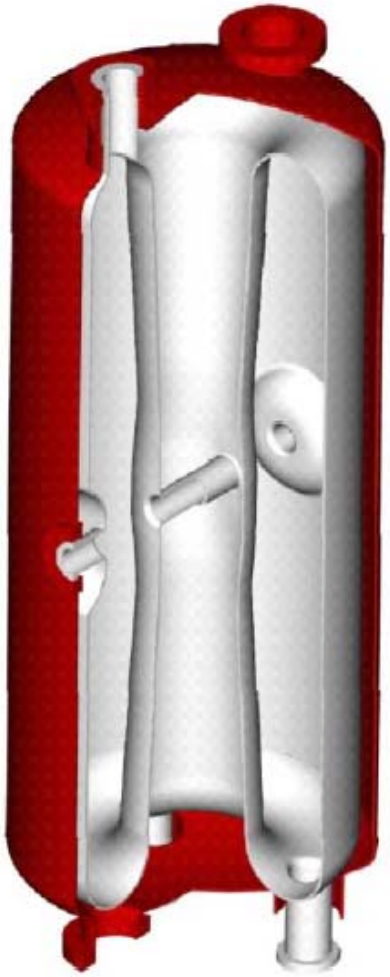

λ/2 Resonant Lines – Single-Spoke

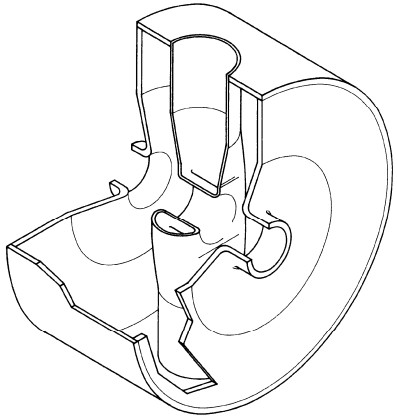

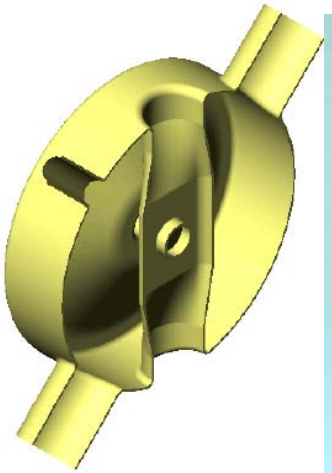

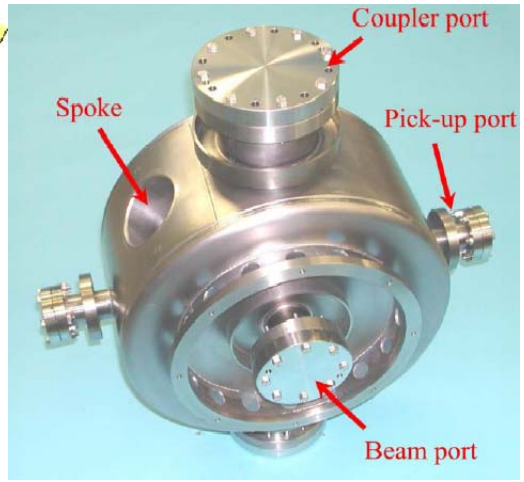

λ/2 Resonant Lines – Double and Triple-Spoke

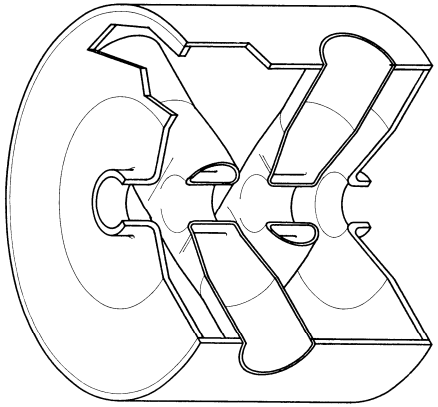

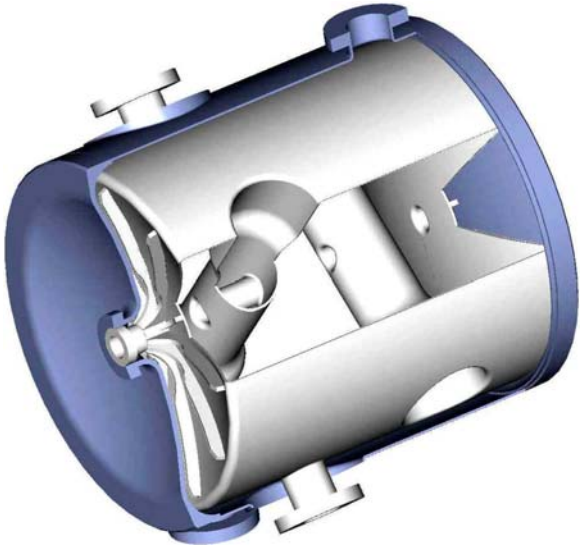

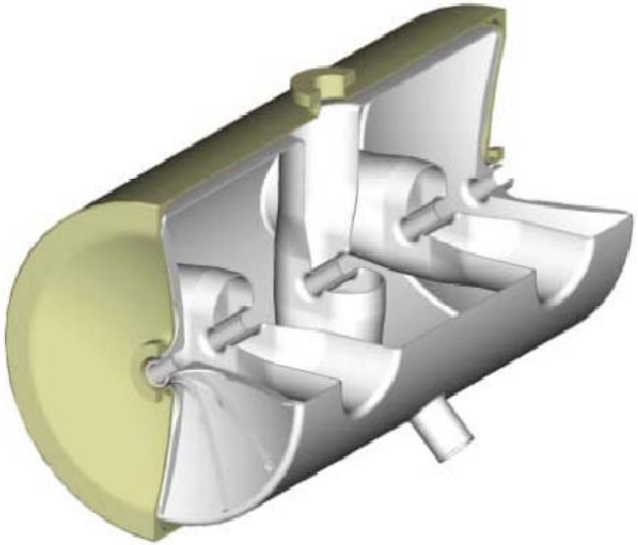

λ/2 Resonant Lines – Multi-Spoke

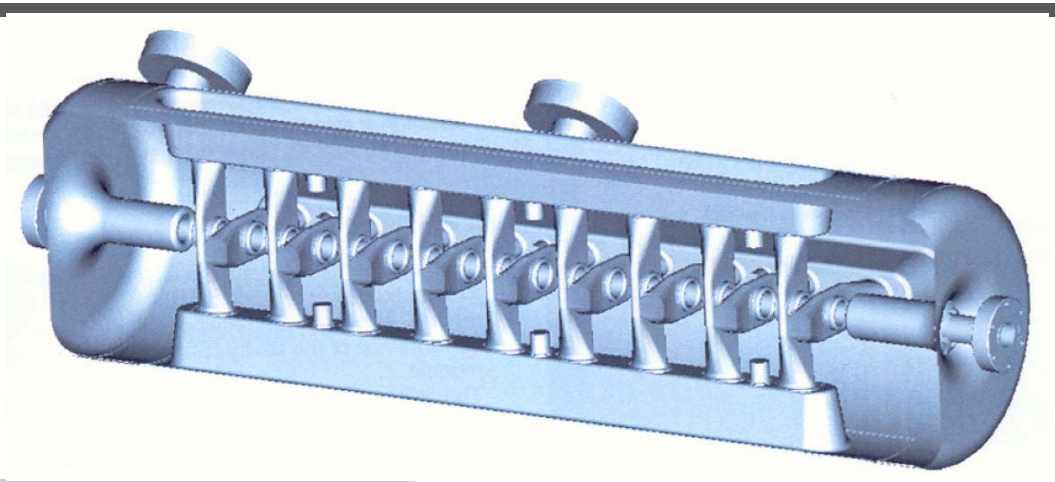

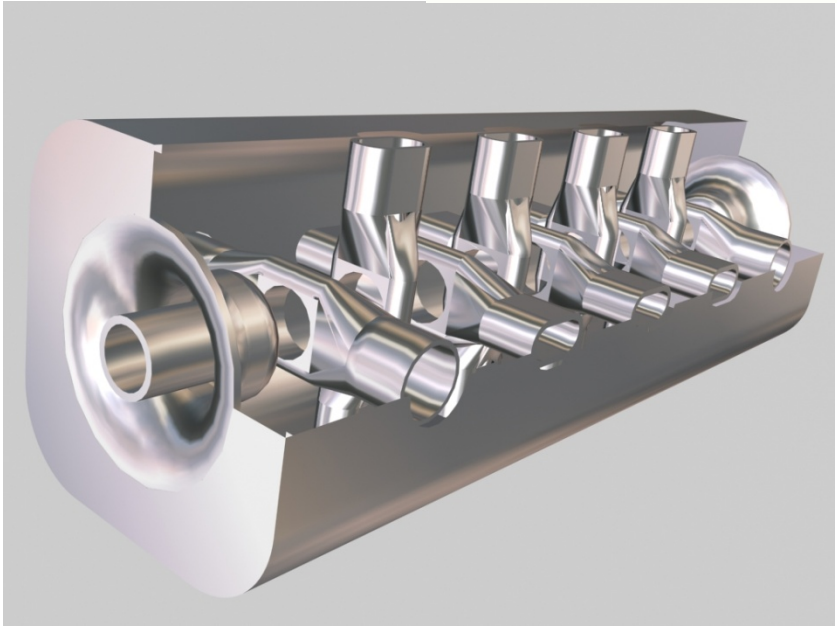

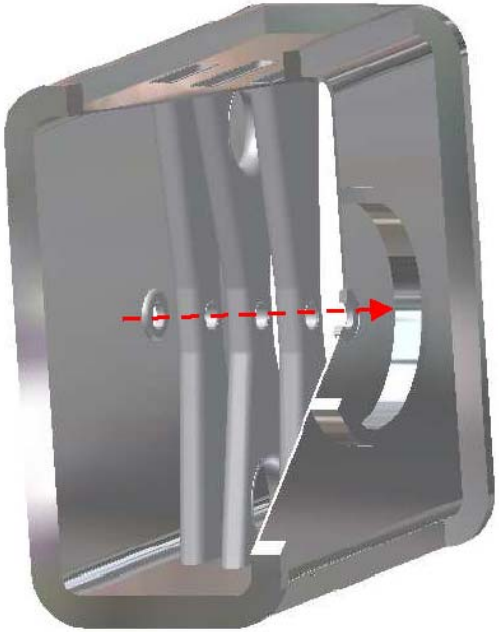

Field Profiles

Electric Field

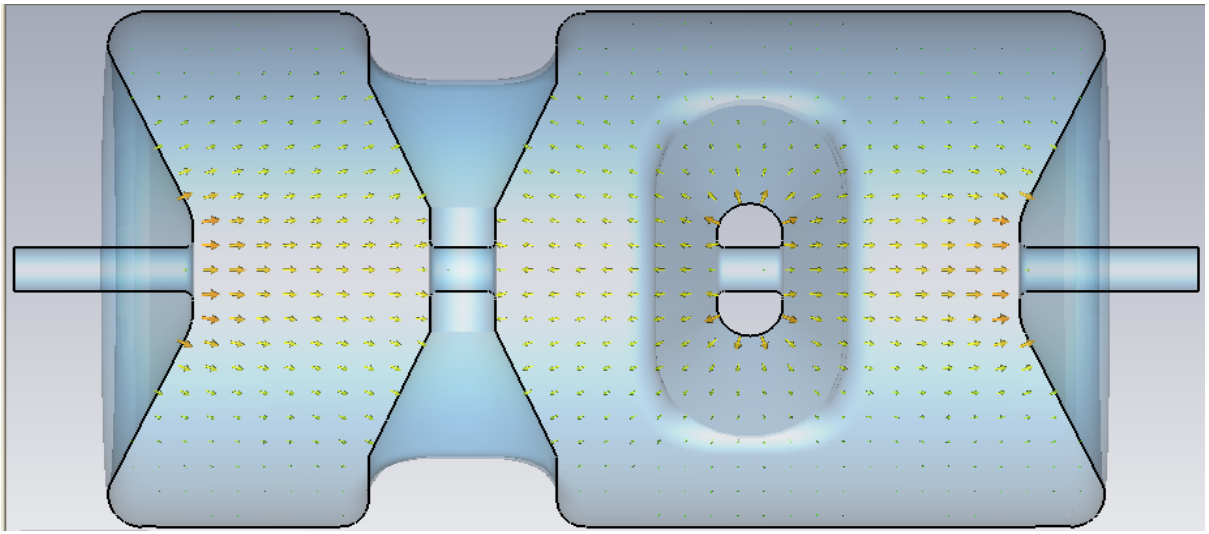

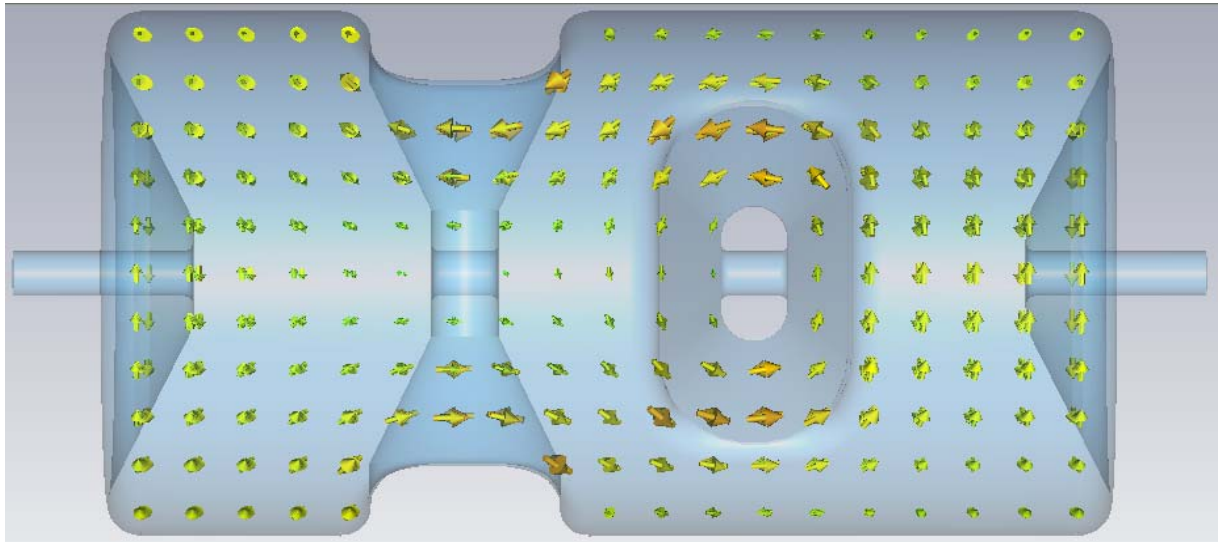

Magnetic Field

Surface Electric Field

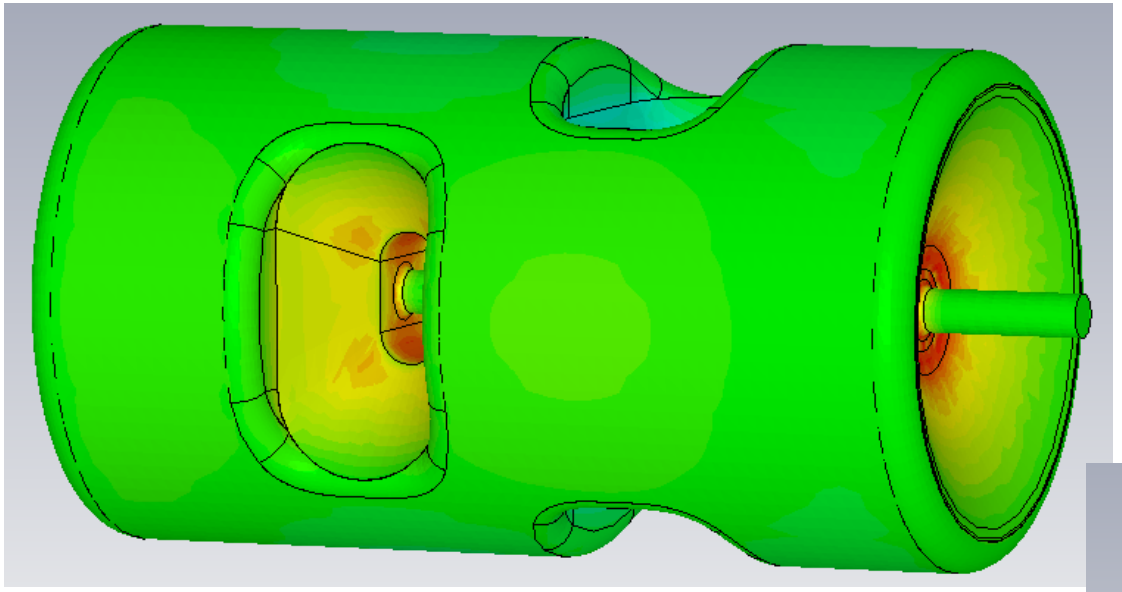

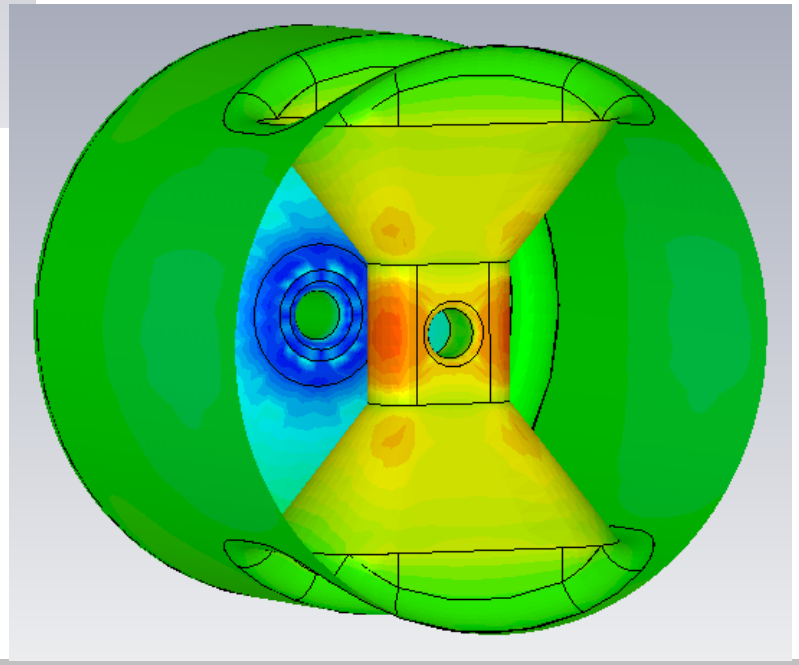

Surface Magnetic Field

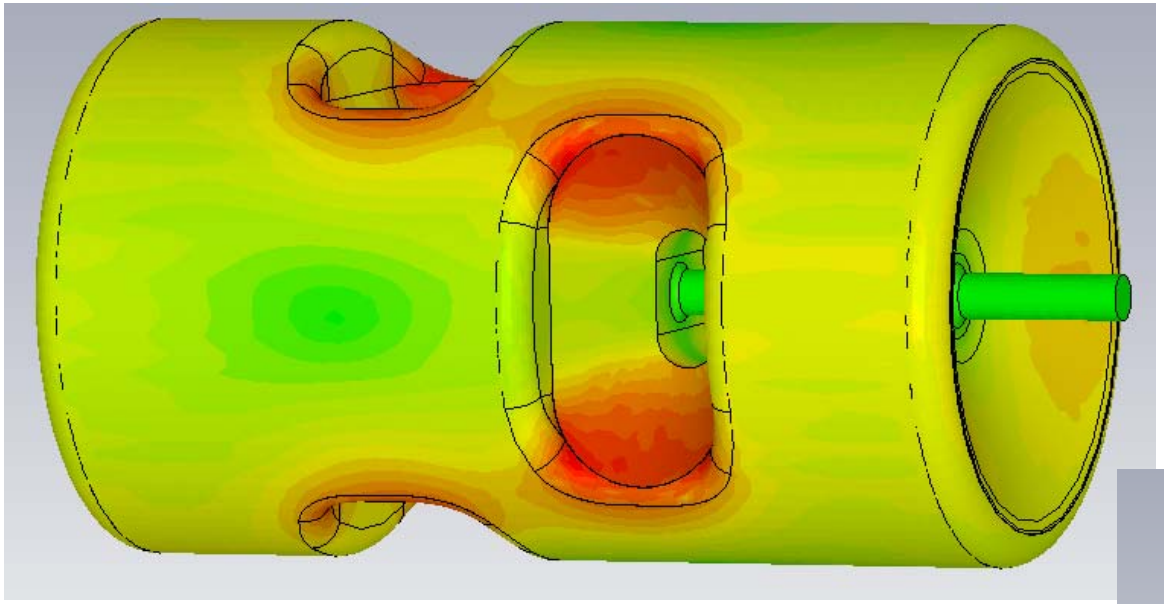

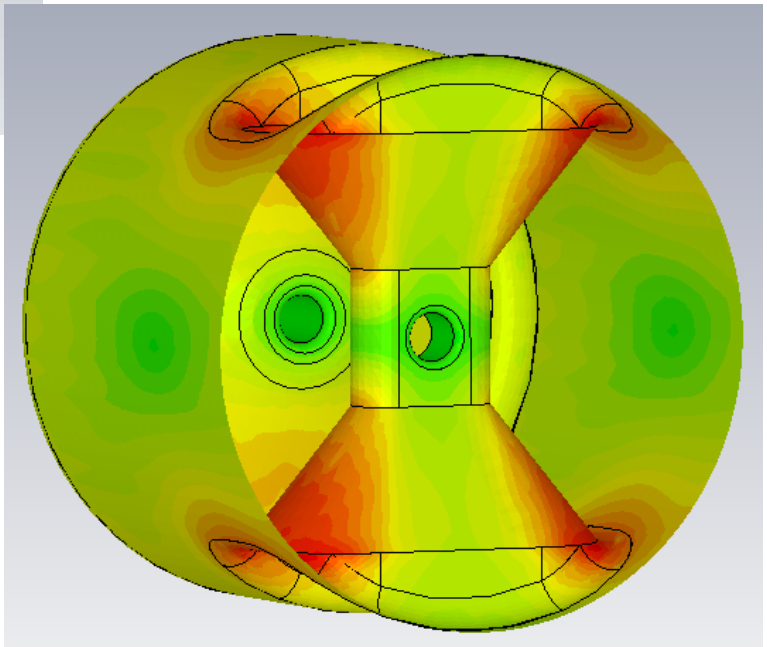

RF Geometry Optimization (Spoke Cavity)

- There have been extensive efforts for design optimization especially to reduce the ratios of Ep/Eacc and Bp/Eacc.
  - Controlling A/B (Ep/Eacc) and C/D (Bp/Eacc) → Shape optimization
  - Flat contacting surface at spoke base will help in another minimization of Bp/Eacc
  - For these cavities:

    Calculations agree well→ Ep/Eacc~3, Bp/Eacc~(7~8) mT/(MV/m), though it is tricky to obtain precise surface field information from the 3D simulation.

    Intrinsically have very strong RF coupling in multi-gap cavity.

    Have rigid nature against static and dynamic vibrations.

    Beta dependency is quite small.

    Diameter~half of elliptical cavity.

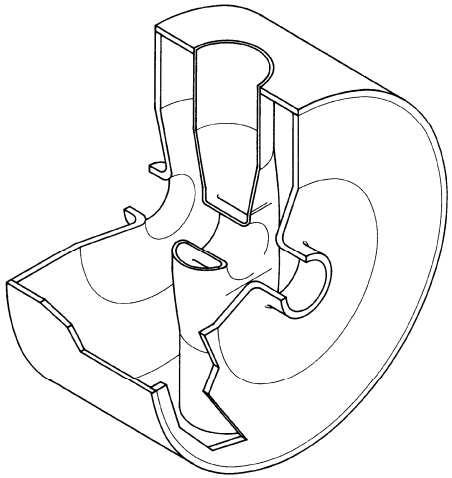

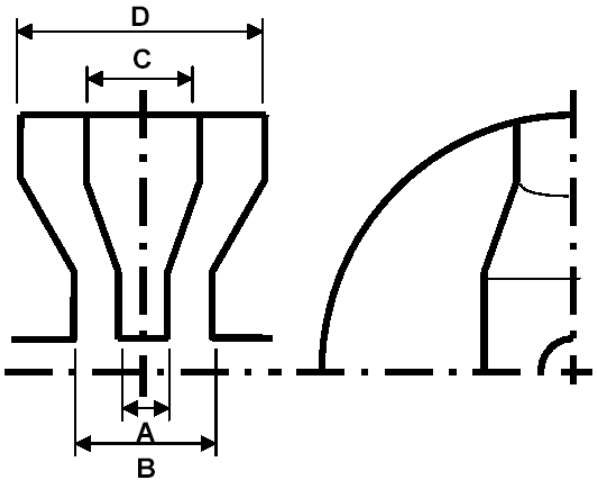

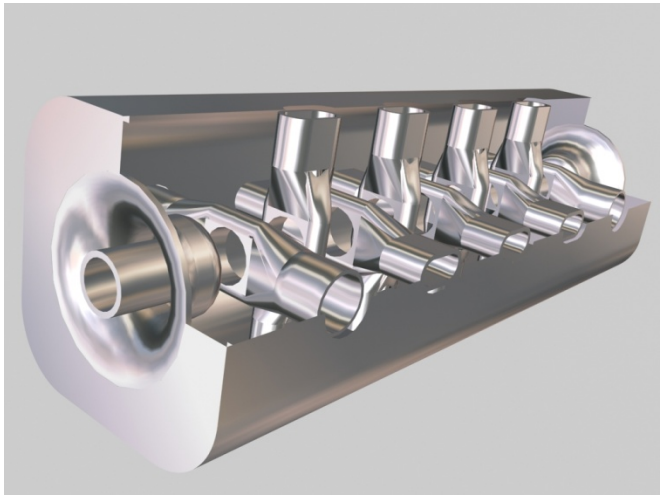

Surface Electric Field

- TM_{010} elliptical structures
  - $E_p/E_a \sim 2$ for $\beta = 1$
  - Increases slowly as β decreases

- $\lambda/2$ structures:
  - Sensitive to geometrical design
  - Electrostatic model of an "shaped geometry" gives $E_p/E_a \sim 3.3$, independent of β

Surface Electric Field

- **Lines: Elliptical** **Squares: Spoke**

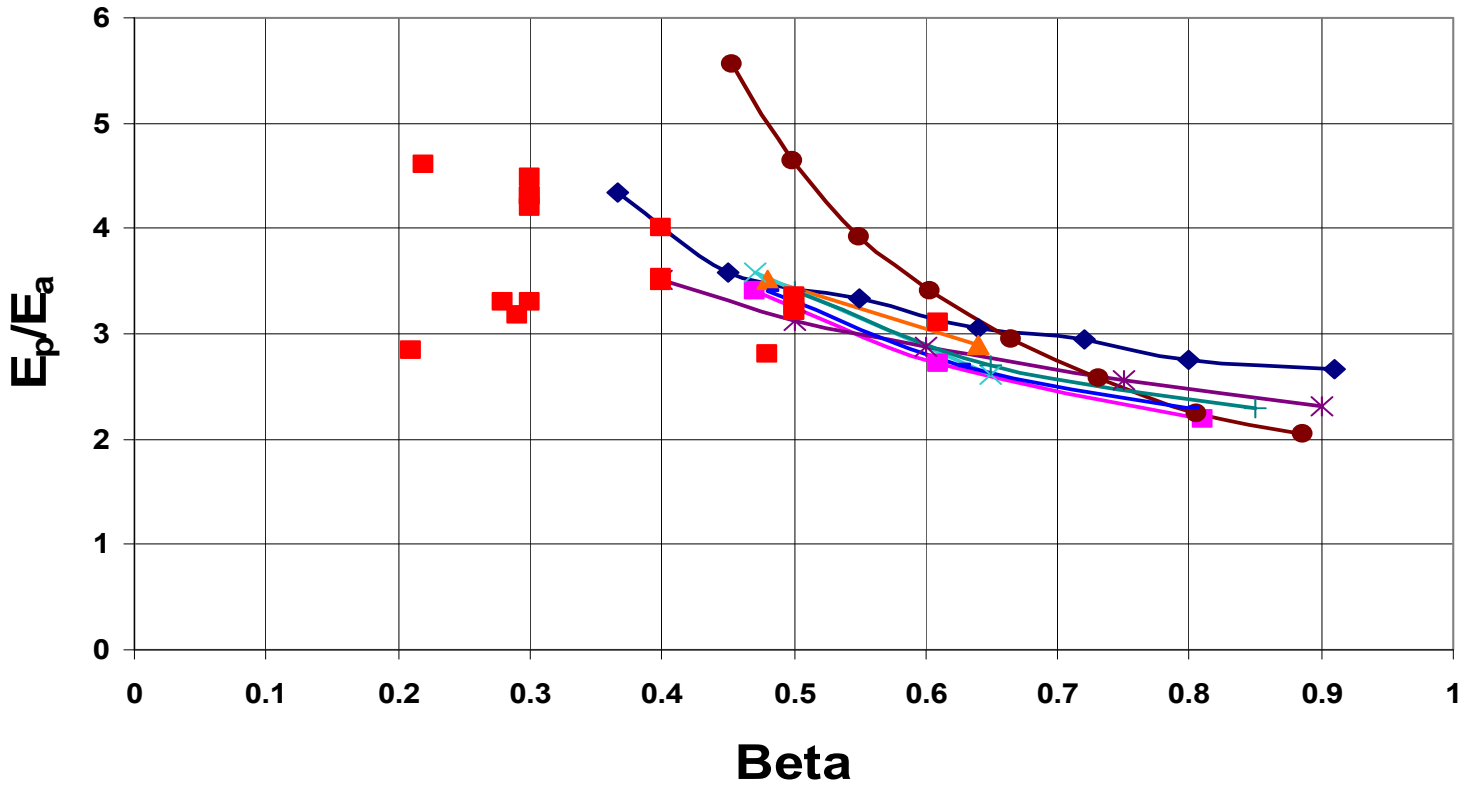

Surface Magnetic Field

- TM_{010} elliptical cavities:
  - B/E_a ~ 4 mT/(MV/m) for β=1
  - Increases slowly as β decreases

- $\lambda/2$ structures:
  - Sensitive to geometrical design
  - Transmission line model gives B/E_a ~ 8 mT/(MV/m), independent of β

Surface Magnetic Field

- **Lines: Elliptical** **Squares: Spoke**

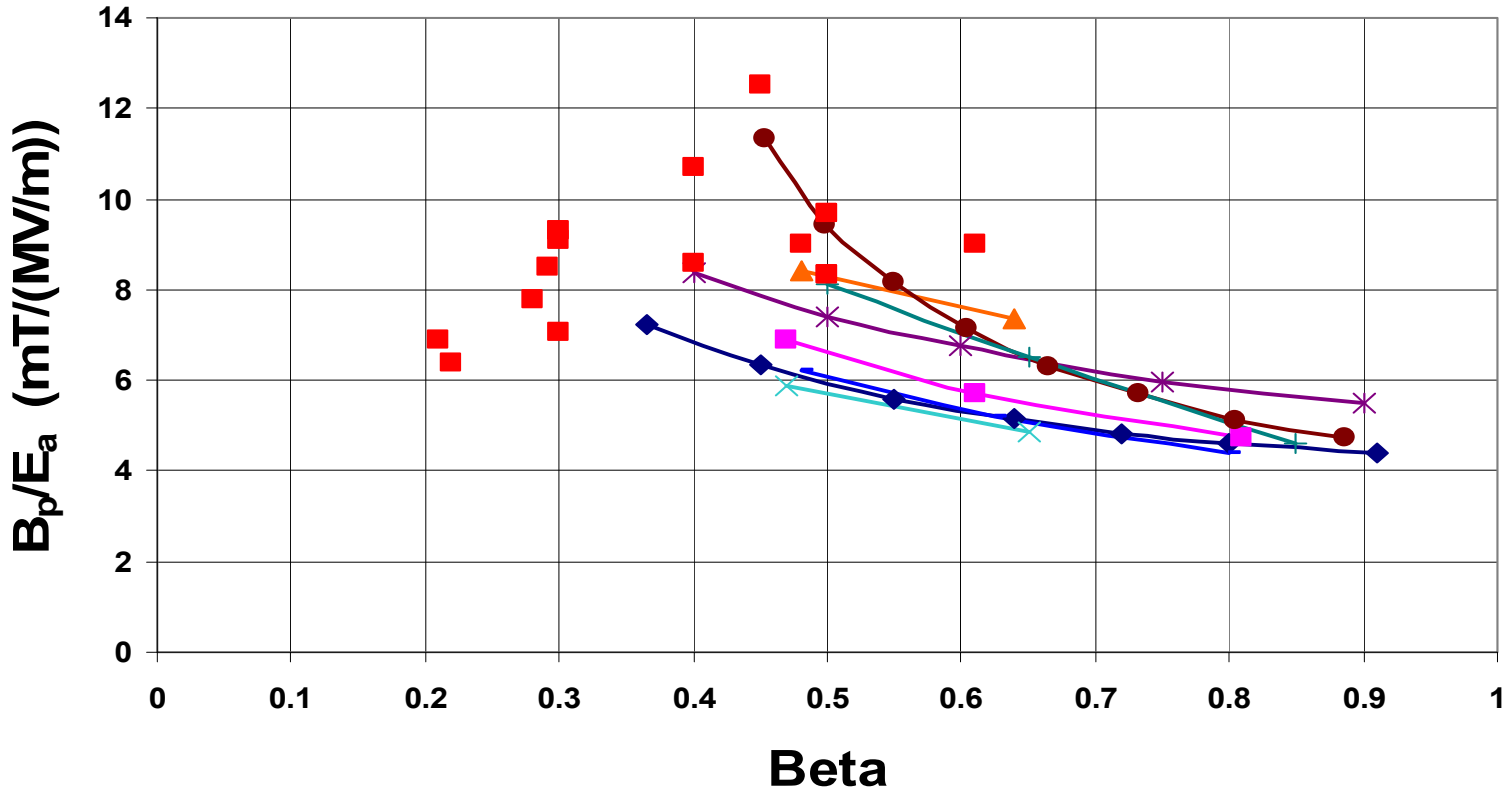

Geometrical Factor (QR_s)

- TM_{010} elliptical cavities:
  - Simple scaling: $QR_s \sim 275\ \beta\ \ (\Omega)$

- $\lambda/2$ structures:
  - Transmission line model: $QR_s \sim 200\ \beta\ \ (\Omega)$

Geometrical Factor (QR_s)

- Lines: Elliptical Squares: Spoke

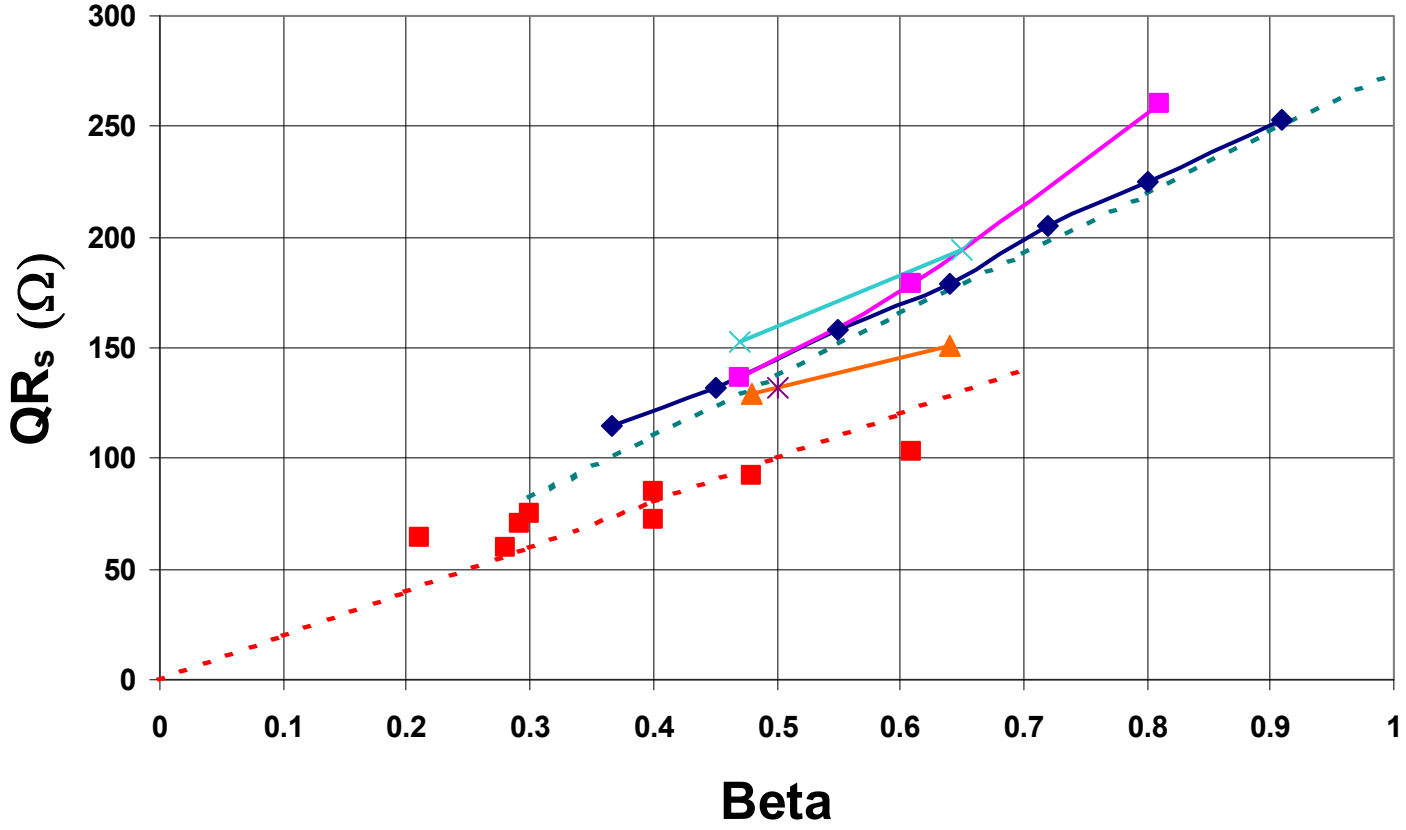

R_{sh}/Q per Cell or Loading Element

- $R_{sh} = V^2/P$
- TM_{010} elliptical cavities:
  - Simple-minded argument, ignoring effect of beam line aperture, gives: $R_{sh} / Q \propto \beta$
  - When cavity length becomes comparable to beam line aperture : $R_{sh} / Q \propto \beta^2$
  - $R_{sh}/Q \sim 120\ \beta^2\ \ (\Omega)$

- $\lambda/2$ structures:
  - Transmission line model gives: $R_{sh}/Q \sim 205\ \Omega$
  - Independent of β

R_{sh}/Q per Cell or Loading Element

Lines: Elliptical **Squares: Spoke**

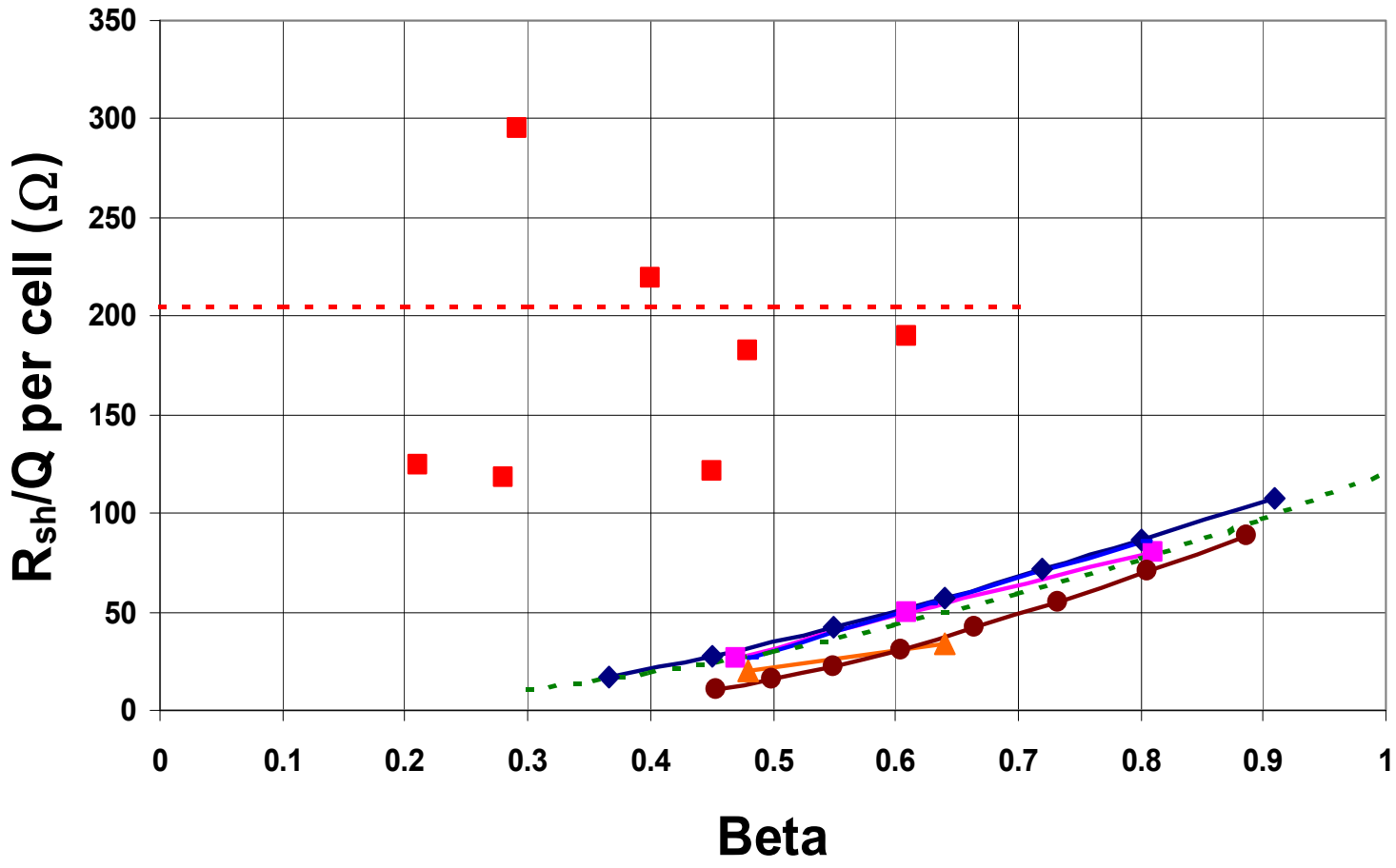

Shunt Impedance R_{sh} (R_{sh}/Q QR_s per Cell or Loading Element)

- TM_{010} elliptical cavities:
  - $R_{sh}\, R_s \sim 33000\, \beta^3 \quad (\Omega^2)$
- $\lambda/2$ structures:
  - $R_{sh}\, R_s \sim 40000\, \beta \quad (\Omega^2)$

Shunt Impedance R_{sh}
(R_{sh}/Q QR_s per cell or loading element)

- **Lines: Elliptical** **Squares: Spoke**

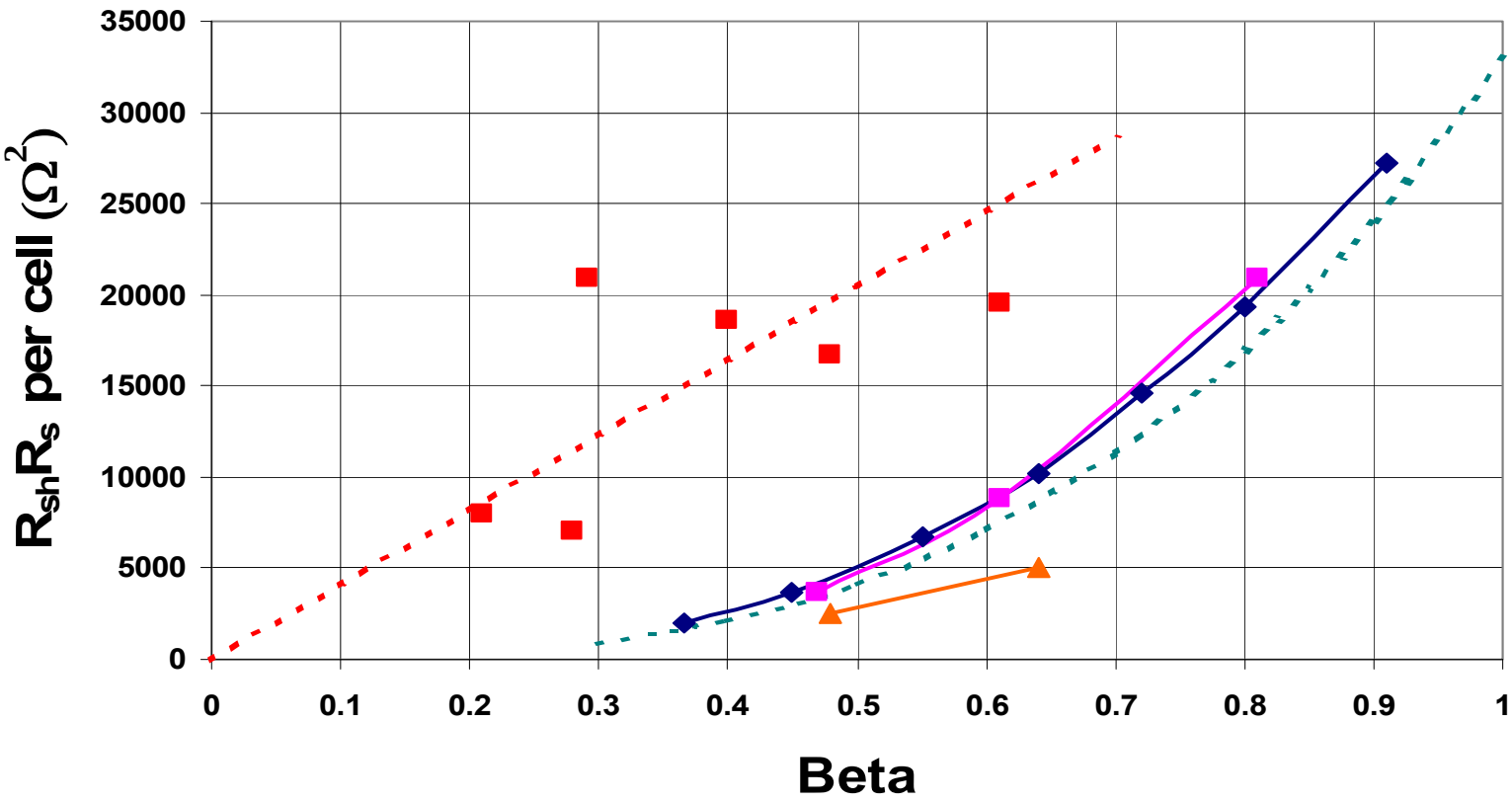

Energy Content per Cell or Loading Element

Proportional to $E^2\lambda^3$

At 1 MV/m, normalized to 500 MHz:

- TM_{010} elliptical cavities:
  - Simple-minded model gives $U / E^2 \propto \beta$
  - In practice: U/E^2 ~ 200-250 mJ
  - Independent of β (seems to increase when β <0.5 – 0.6)

- $\lambda/2$ structures:
  - Sensitive to geometrical design
  - Transmission line model gives U/E^2 ~ 200 β^2 (mJ)

Energy Content per Cell or Loading Element

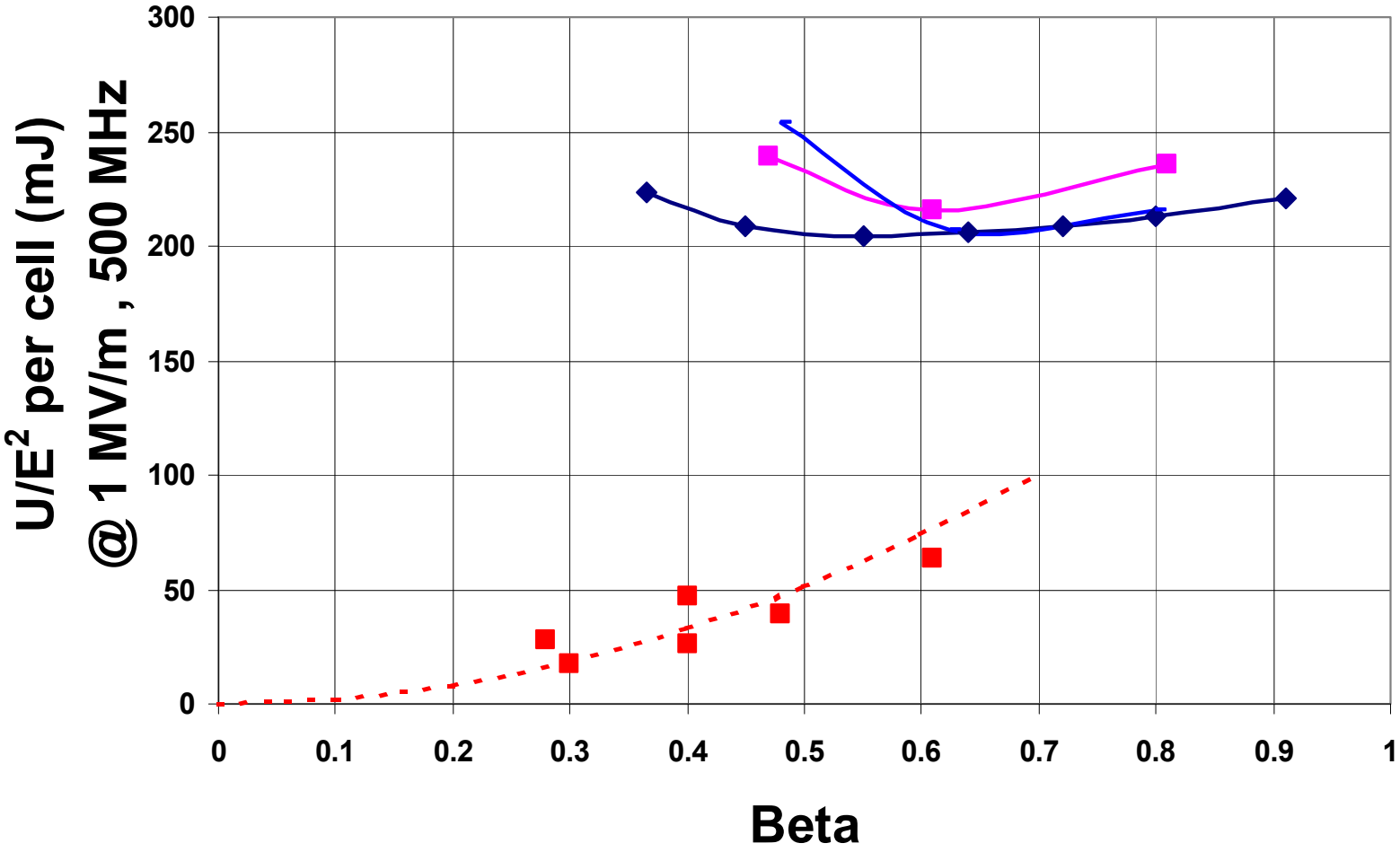

Size & Cell-to-Cell Coupling

TM_{010} Structures

Dia ~ 0.88 – 0.92 λ

Coupling ~ 2%

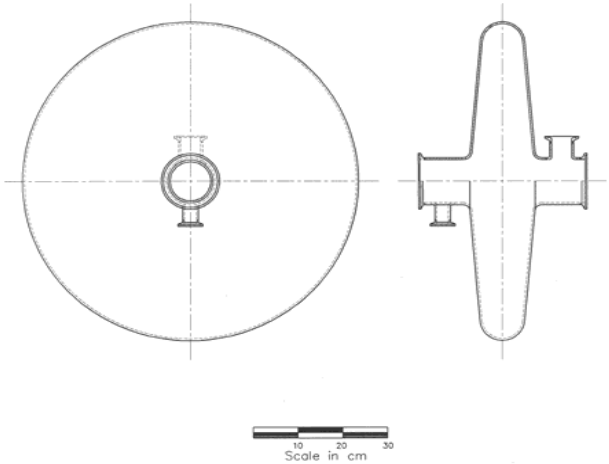

λ /2 Structures

Dia~ 0.46 – 0.51 λ

Coupling ~ 20 - 30%

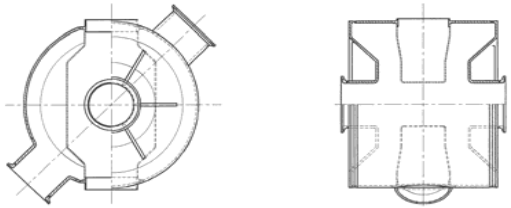

Example : 350 MHz, β= 0.45

Multipacting

- TM_{010} elliptical structures
  - Can reasonably be modeled and predicted/avoided
  - Modeling tools exist

- $\lambda/2$ Structures
  - Much more difficult to model
  - Reliable modeling tools do not exist
  - Multipacting “always” occurs
  - “Never” a show stopper

TM Structures – Positive Features

- Geometrically simple
- Familiar
- Large knowledge base
- Good modeling tools
- Low surface fields at high β
- Small number of degrees of freedom

$\lambda/2$ Structures – Positive Features

- Compact, small size
- High shunt impedance
- Robust, stable field profile (high cell-to-cell coupling)
- Mechanically stable, rigid (low Lorentz coefficient, microphonics)
- Small energy content
- Low surface fields at low β
- Large number of degrees of freedom

Features of Spoke Cavities

- **Strong cell-to-cell coupling in multi-spoke**
  - All the cells are linked by the magnetic field
  - Field profile robust with respect to manufacturing inaccuracy
  - No need for field flatness tuning
  - Closest mode well separated

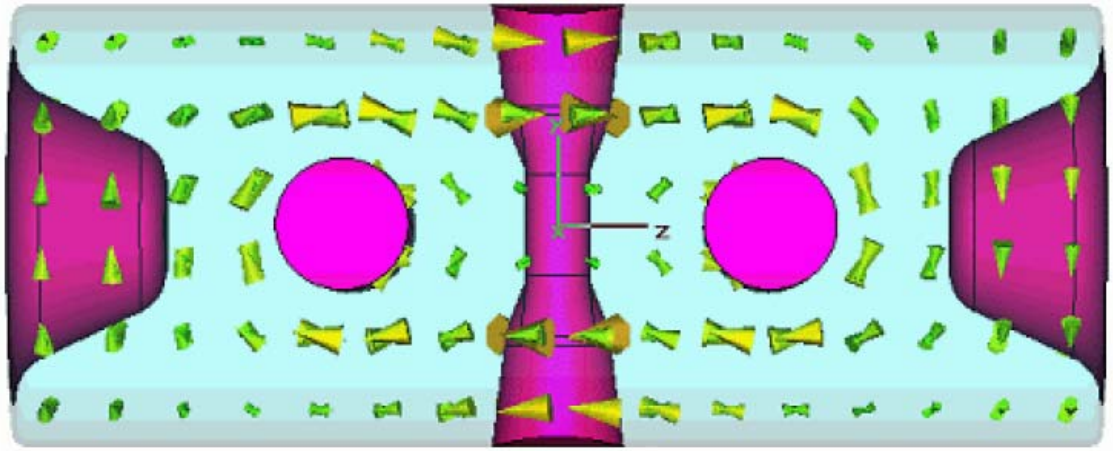

Magnetic Field Profile: 352 MHz, β=0.48 (FZJ)

Features of Spoke Cavities

- **Accelerating mode has lowest frequency**
  - No lower-order mode
  - Easier HOM damping

	3-spoke		9-cell (TESLA)	
Mode #	Freq. (MHz)	Δf/f % of f_{ACC}	Freq. (MHz)	Δf/f % of f_{ACC}
1	345		1275.6	1.7
2	365	5.7	1277.6	1.6
3	401	14	1280.7	1.4
4	442	28	1284.5	1.1
5	482	40	1288.5	0.8
6	519.7	51	1292.4	0.5
7	520.2	51	1295.5	0.2
8	534	55	1297.6	0.05
9	619	79	1298.3	
10	679	97		

M. Kelly (ANL)

Features of Spoke Cavities

- **Electromagnetic energy concentrated near the spokes**
  - Low energy content
  - High shunt impedance
  - Low surface field on the outer surfaces
    - Couplers (fundamental and HOM) can be located on outer conductor
    - Couplers do not use beamline space

325 MHz, β=0.17 (FNAL)

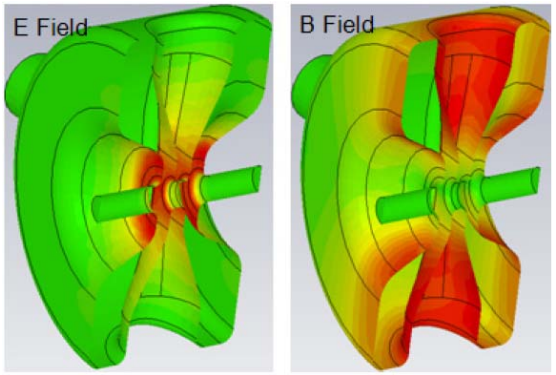

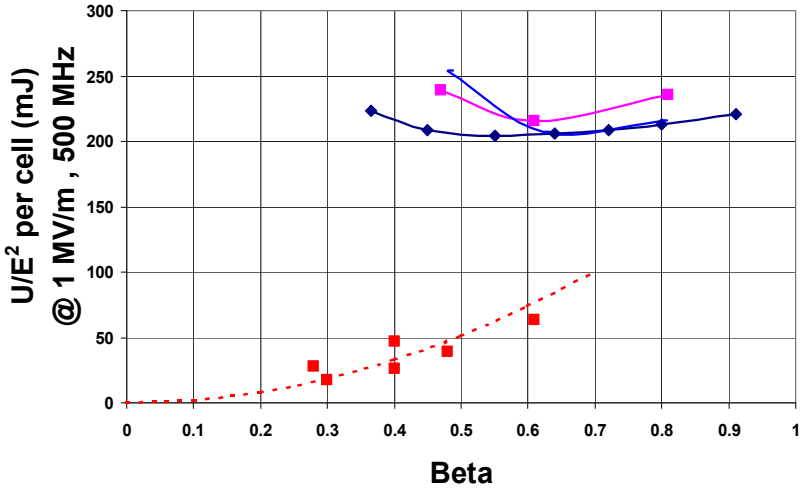

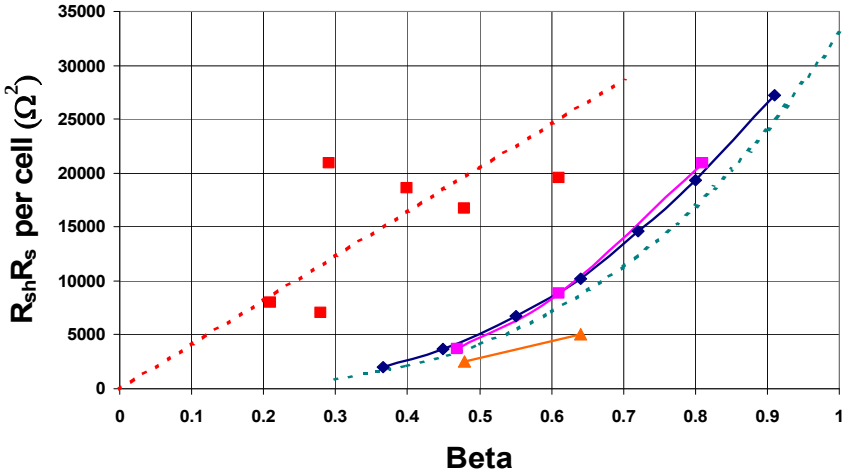

Features of Spoke Cavities

- **Peak surface electromagnetic fields**
  - At high β, peak surface electromagnetic fields tend to be higher for spoke cavities
  - Difference may be small at constant real estate gradient
  - Spoke cavities will usually be used in applications where gradients are modest (cw and/or high-current)

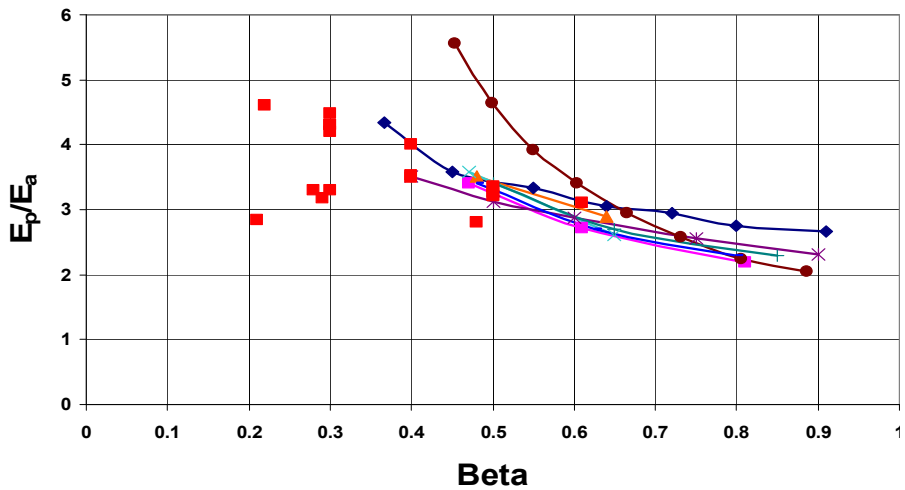

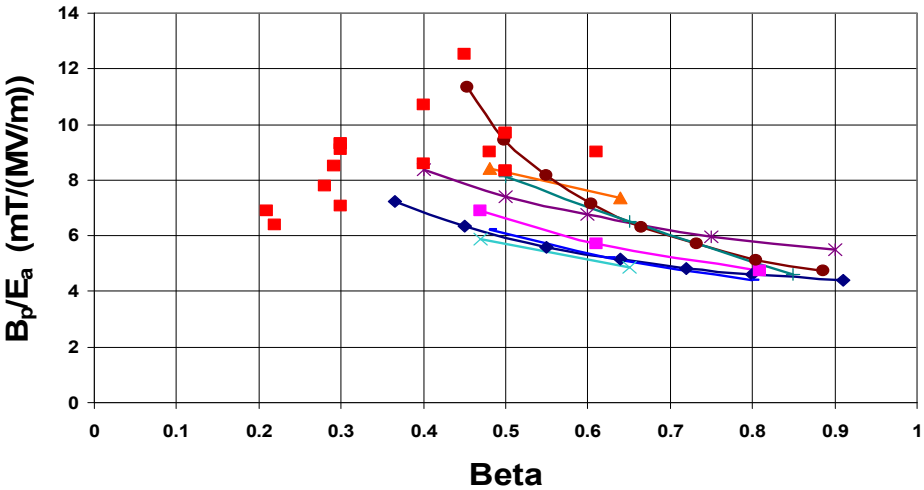

Features of Spoke Cavities

- **Few mechanical modes, none at low frequency**

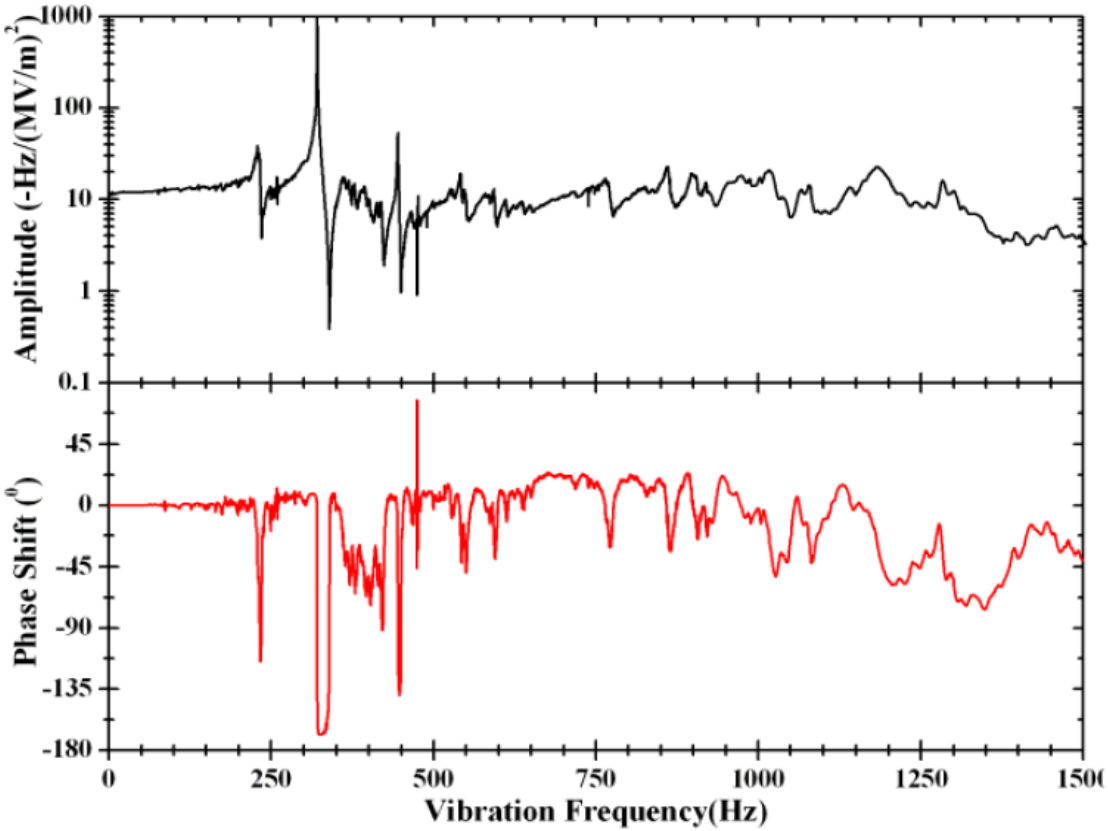

Lorentz Transfer Function: 345 MHz, β=0.5, triple-spoke (Z. Conway, ANL)

Spoke Cavities Worldwide

Labs	Spoke-type	Frequency [MHz]	Geometrical /Optimal betas	Eacc max [MV/m]		Epk [MV/m]		Bpk [mT]		Voltage gain [MV]		Limitation	
				4.2 K	2 K	4.2 K	2 K	4.2 K	2 K	4.2 K	2 K	4.2 K	2 K
IPN Orsay	Single	352	0.15/0.20	4.8		32.0		69.0		0.8		Quench	
	Single	352	0.35/0.36	8.1	10.6	38.0	49.5	104.0	134.0	2.5	3.2	Power	Quench
ANL	Single	855	0.28/0.28	4.4		24.0		56.0		0.3		Power	
	Single	345	0.29/0.29	8.8	8.6	40.0	39.0	106.0	105.0	2.2	2.2	Quench	Quench
	Single	345	0.40/0.40	7.0	7.3	44.0	46.0	117.0	123.0	2.4	2.6	Quench	Quench
	Double	345	0.40/0.40	8.6	8.8	40.0	41.0	79.0	81.0	4.5	4.6	Quench	Quench
	Triple	345	0.50/0.50	7.7	7.7	28.0	28.0	88.0	88.0	6.7	6.7	Quench	Quench
	Triple	345	0.63/0.63	7.9	9.5	31.0	37.0	95.0	114.0	8.7	10.4	Quench	Quench
LANL	Single	350	0.175/0.21 EZ01	7.5	7.5	38.0	38.0	100.0	100.0	1.4	1.4	Quench	Quench
	Single	350	0.175/0.21 EZ02	7.2	7.5	37.0	38.0	96.0	100.0	1.3	1.4	Quench	Quench
Juelich	Triple	760	0.2/0.2	8.6	12.2	42.8	60.6	87.2	123.3	1.4	1.9	Quench	Power
	Triple	352	0.48/0.48										
Fermilab	Single	325	0.21/0.21 SSR1-01	12.0	9.1	43.7	33.0	69.7	52.6	2.4	1.8	Time out	Power limit
	Single	325	0.21/0.21 SSR1-02	16.7	22.0	60.8	80.2	96.8	127.7	3.4	4.5	Quench	Quench
	Single	325	0.21/0.21 SSR1-03										
	Single	325	0.21/0.21 SSR1-04										

G. Olry, IPN Orsay

Experimental Results

- **Achieved gradients (single spoke)**

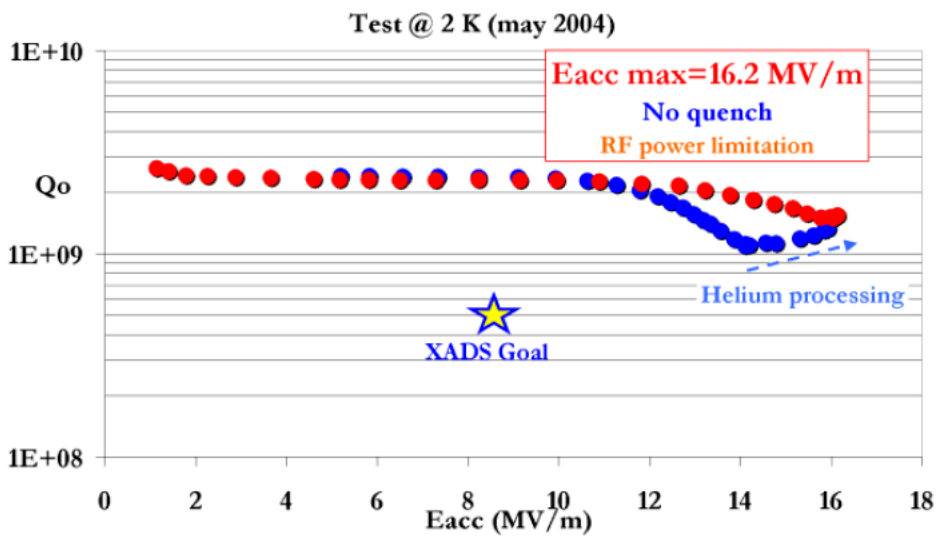

352 MHz, β=0.35 (IPN Orsay)

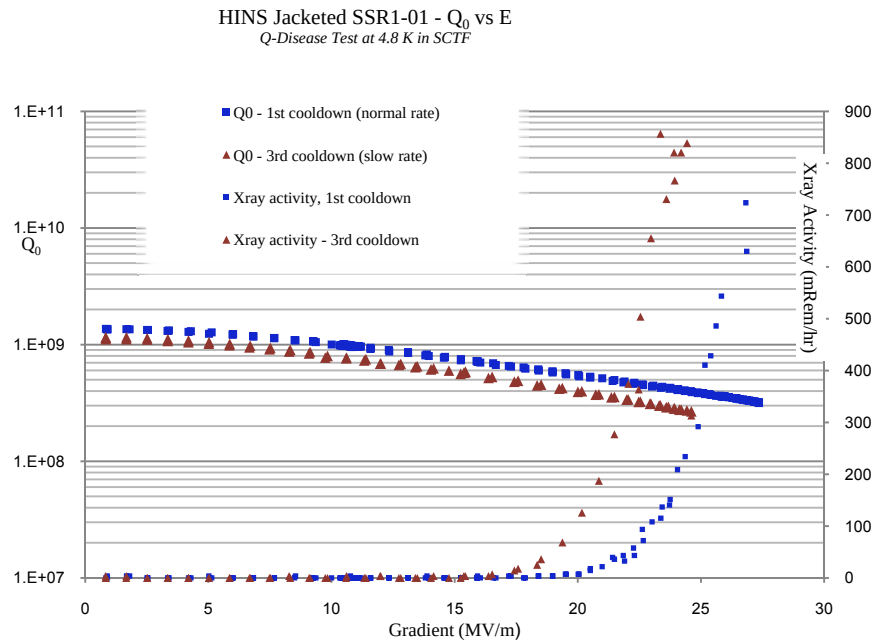

325 MHz, β=0.22 (FNAL)

Experimental Results

- **Achieved gradients (triple spoke)**

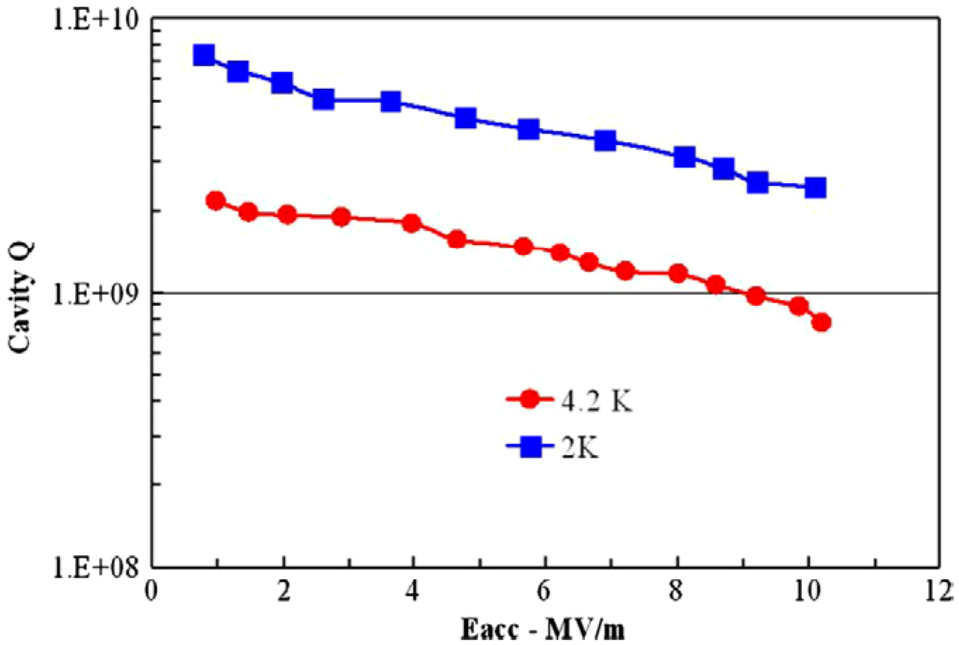

345 MHz, β=0.5 (ANL)

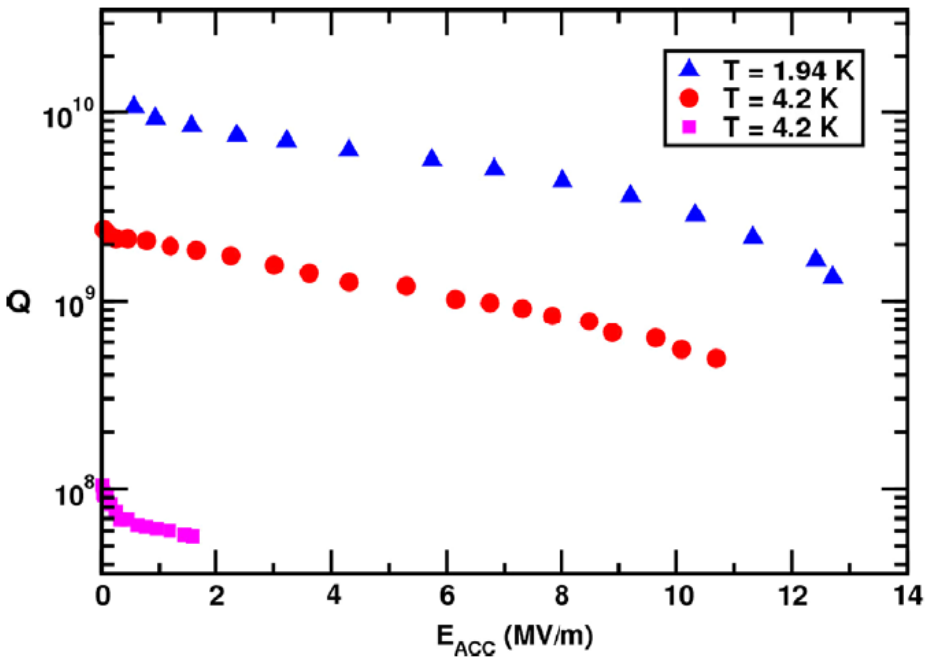

345 MHz, β=0.63 (ANL)

Experimental Results

- **Hydrogen degassing at 600^{0}C (triple spoke)**

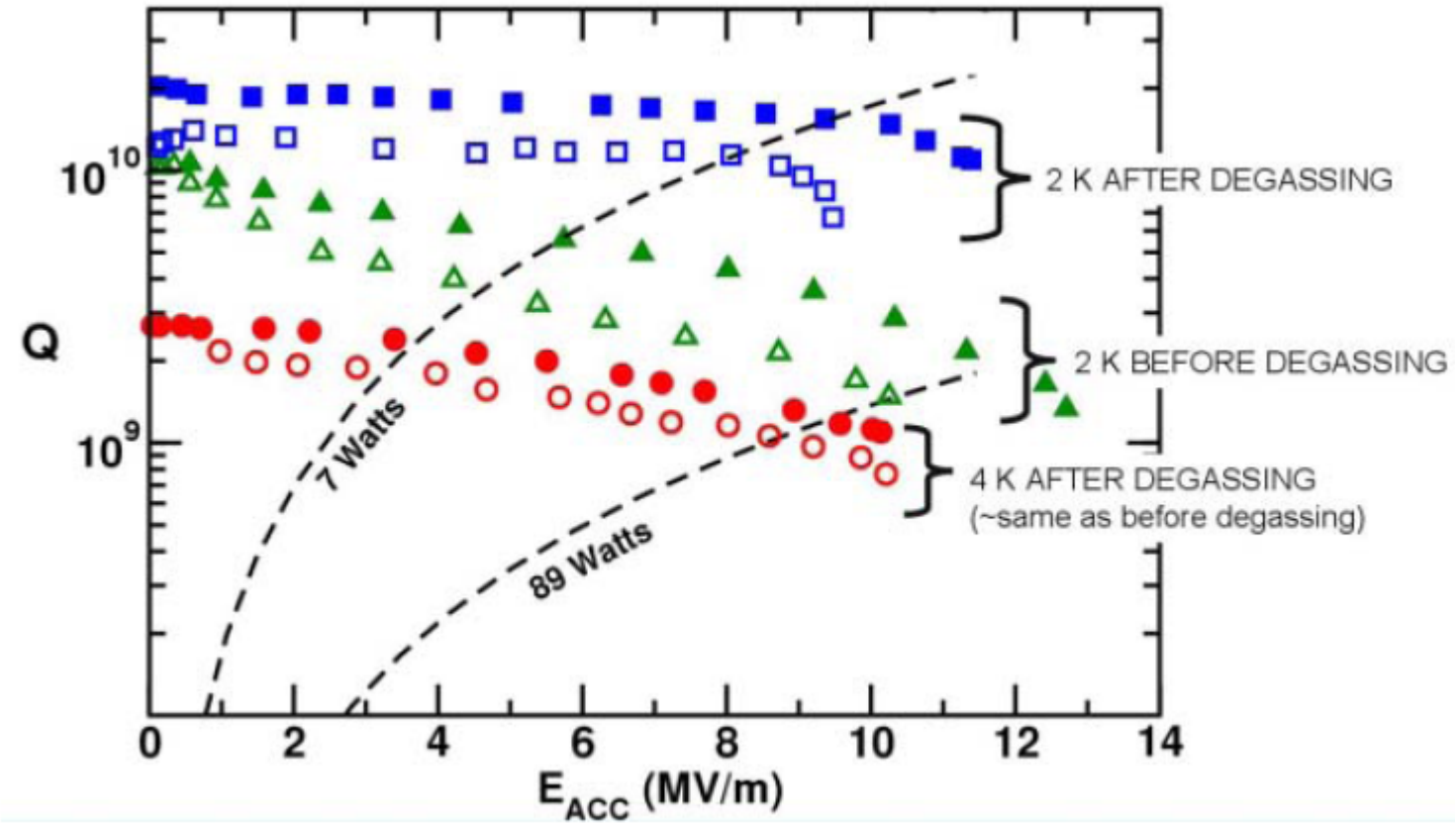

Open symbols: 345 MHz, β=0.5 (ANL)

Closed symbols: 345 MHz, β=0.63 (ANL)

Experimental Results

- **Sensitivity to magnetic field**

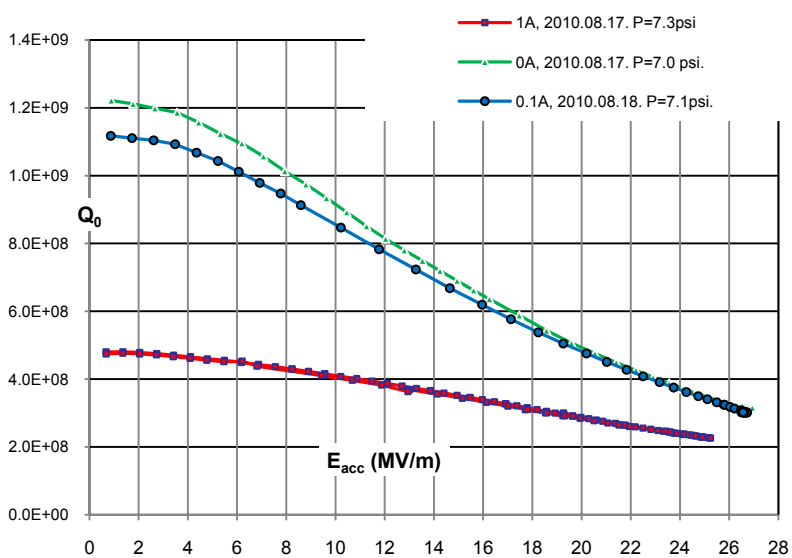

Q_0 degradation due to magnetic field captured during cooling down. (1 A (red) is 2 G field)

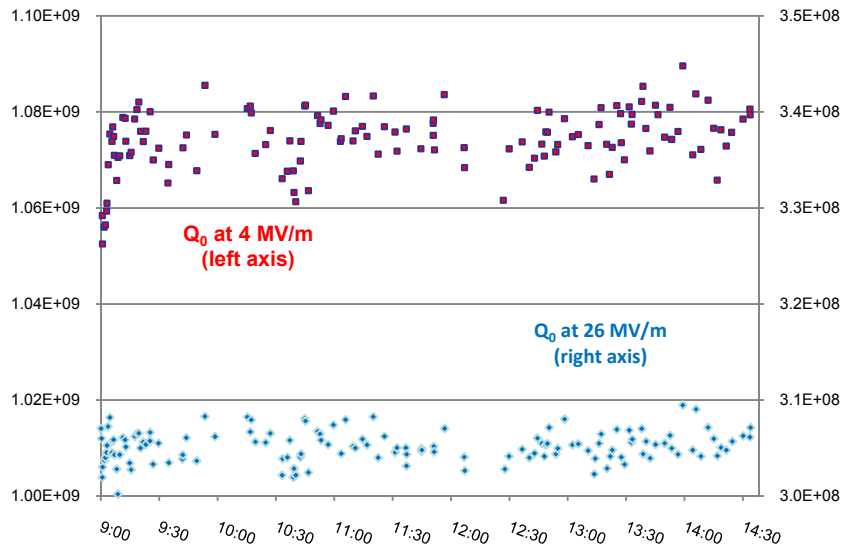

Q_0 at low and high E_{acc} during period of multiple quenches in presence of 8-10 G magnetic field

325 MHz, β=0.22 (FNAL)

Experimental Results

- **Microphonics and sensitivity to He pressure**

Before optimization

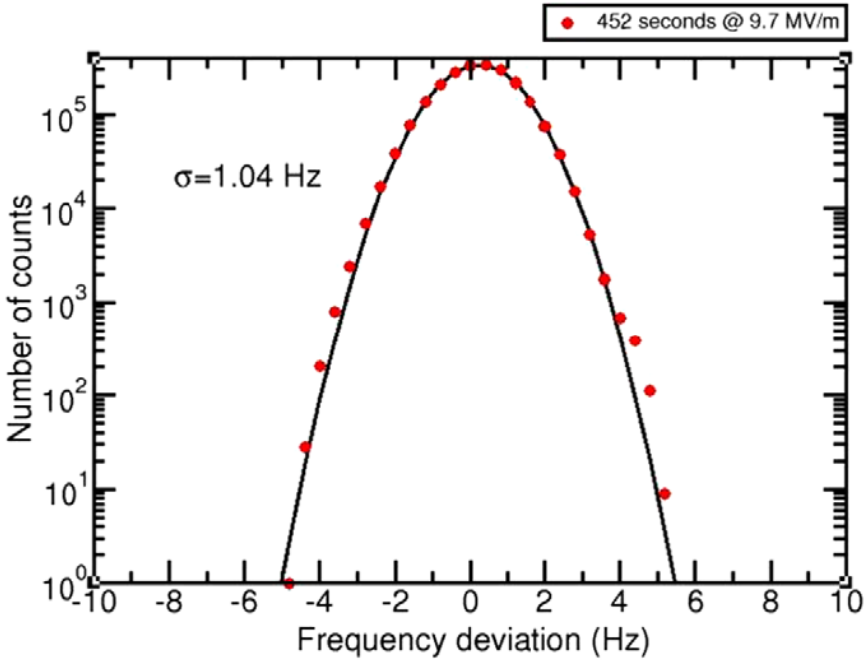

df/dp= -9.6 Hz/mbar

After optimization

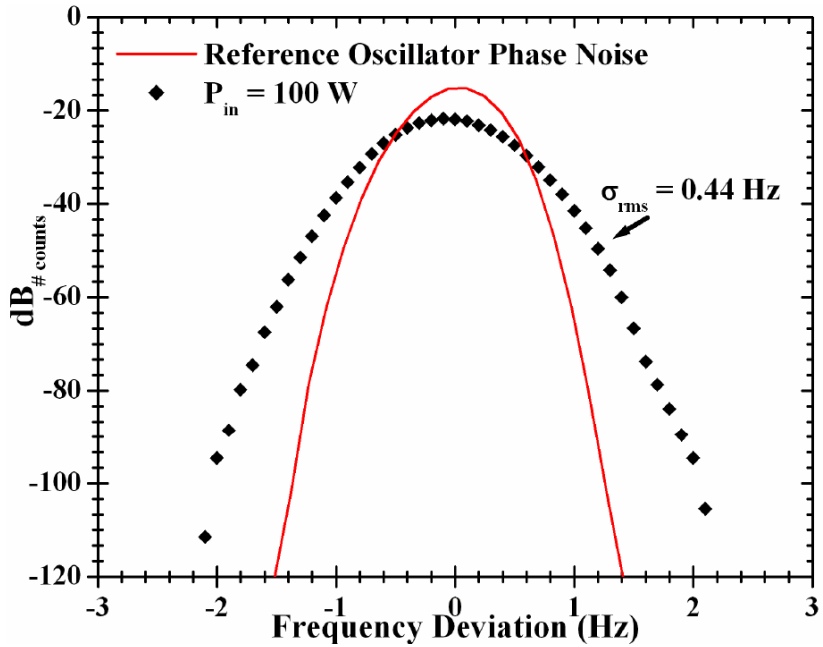

df/dp= -0.4 Hz/mbar

345 MHz, β=0.5, triple-spoke (Z. Conway, ANL)

Experimental Results

- **Microphonics control with piezo tuners**

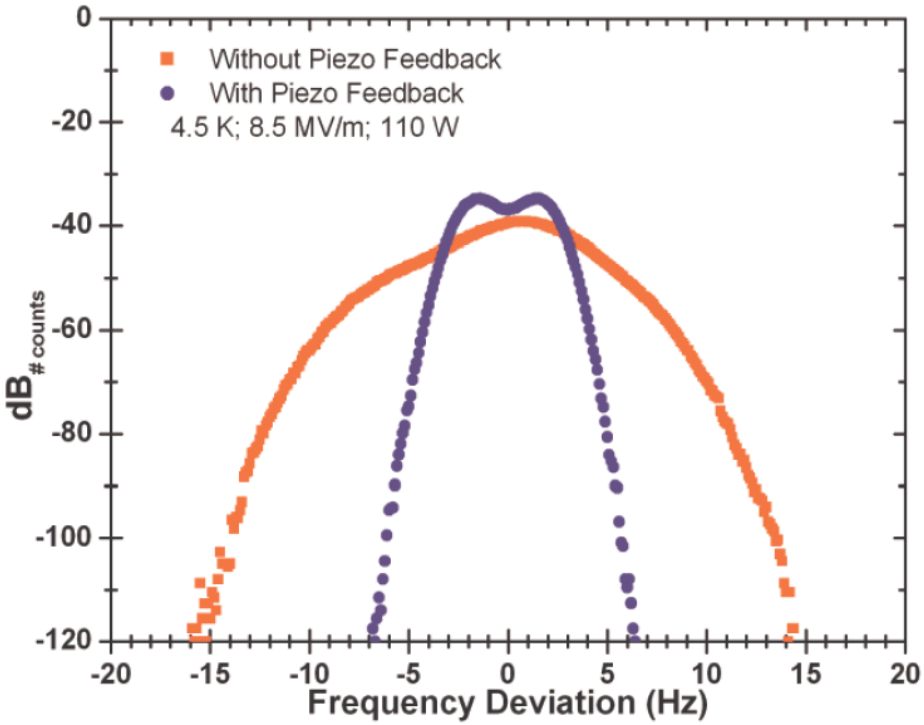

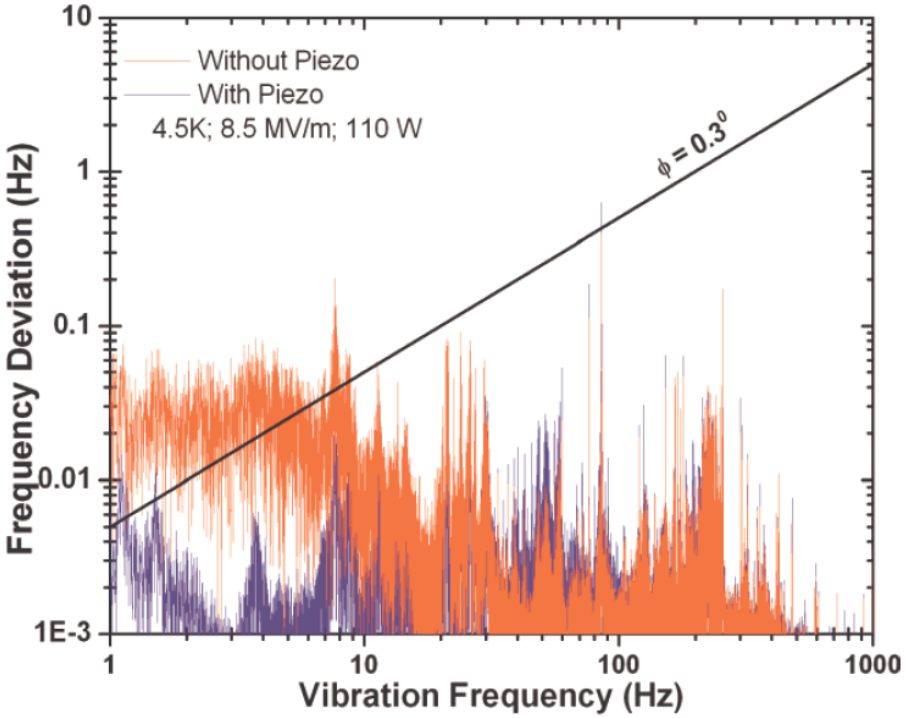

345 MHz, β=0.5 Triple spoke (ANL)
Low frequency microphonics intentionally enhanced by connecting the cavity to forced-flow system

EURISOL

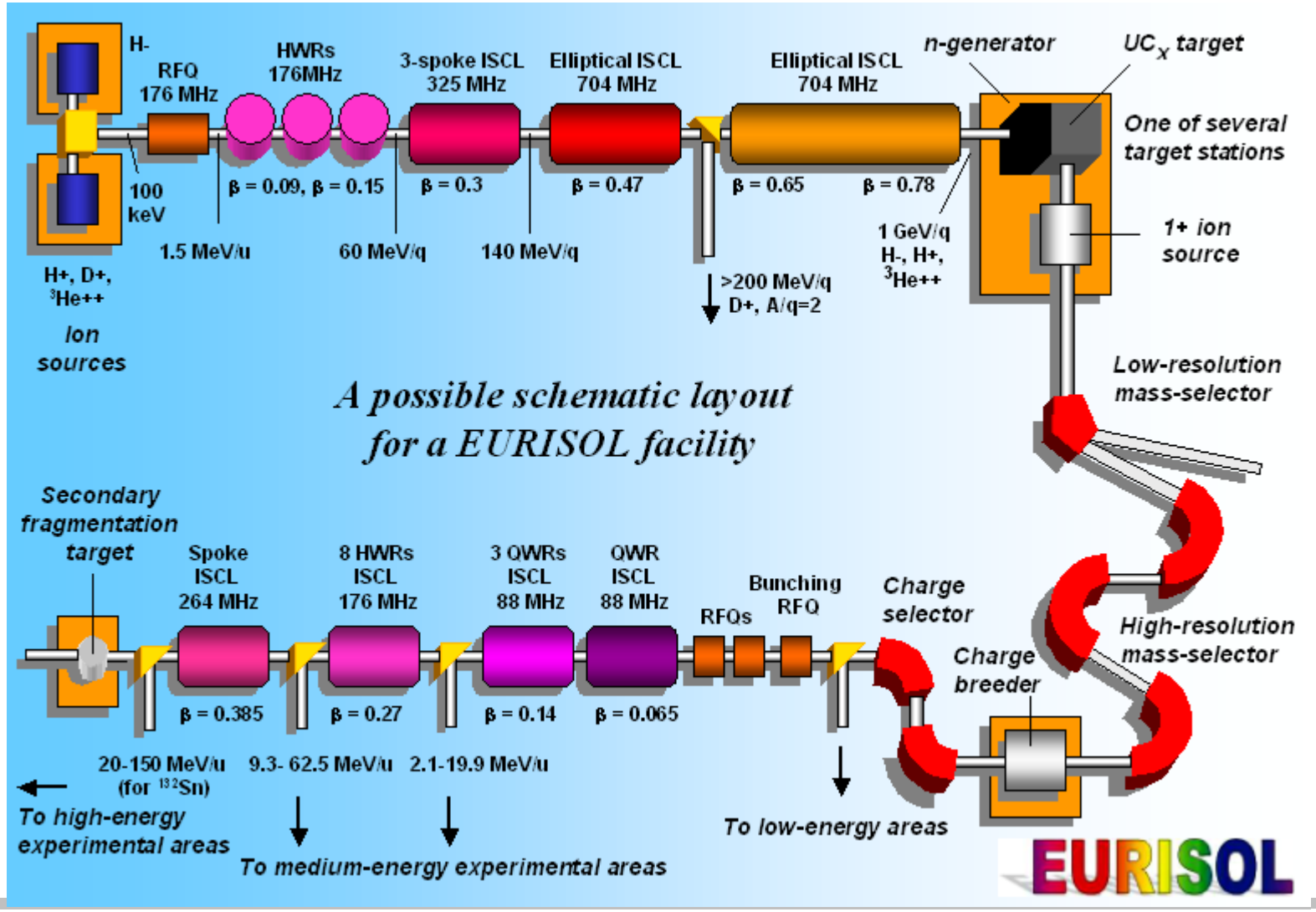
H-
RFQ
176 MHz
HWRs
176MHz
3-spoke ISCL
325 MHz
Elliptical ISCL
704 MHz
Elliptical ISCL
704 MHz
n-generator
UC$_x$ target
One of several
target stations
100
keV
β = 0.09, β = 0.15
β = 0.3
β = 0.47
β = 0.65
β = 0.78
1.5 MeV/u
60 MeV/q
140 MeV/q
1 GeV/q
H-, H+,
^{3}He++
1+ ion
source
H+, D+,
^{3}He++
ion
sources
>200 MeV/q
D+, A/q=2
Low-resolution
mass-selector
A possible schematic layout
for a EURISOL facility
Secondary
fragmentation
target
Spoke
ISCL
264 MHz
8 HWRs
ISCL
176 MHz
3 QWRs
ISCL
88 MHz
QWR
ISCL
88 MHz
RFQs
Bunching
RFQ
Charge
selector
High-resolution
mass-selector
Charge
breeder
β = 0.385
β = 0.27
β = 0.14
β = 0.065
20-150 MeV/u
(for ^{132}Sn)
9.3- 62.5 MeV/u
2.1-19.9 MeV/u
To high-energy
experimental areas
To medium-energy experimental areas
To low-energy areas
EURISOL

EURISOL

IPN Orsay

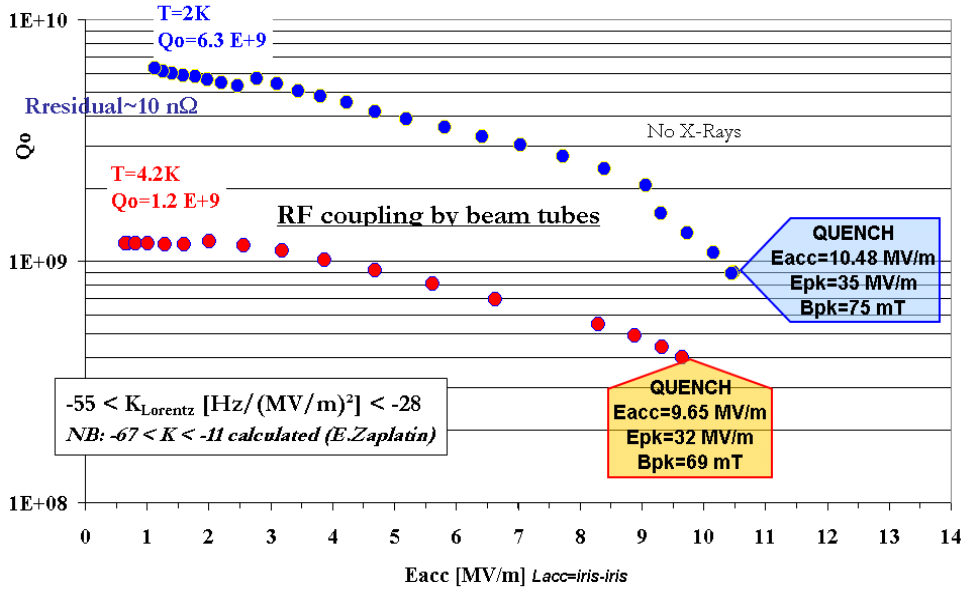

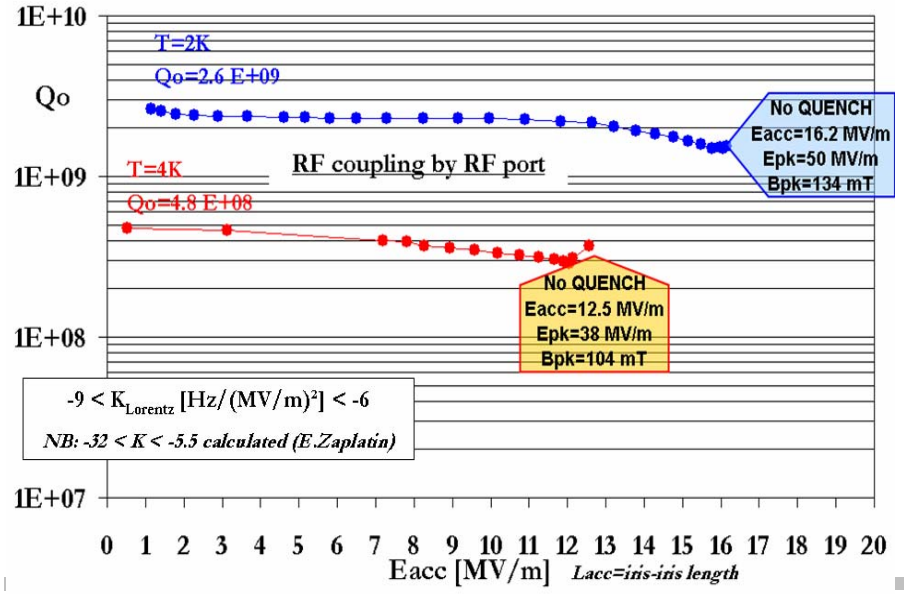

EUROTRANS

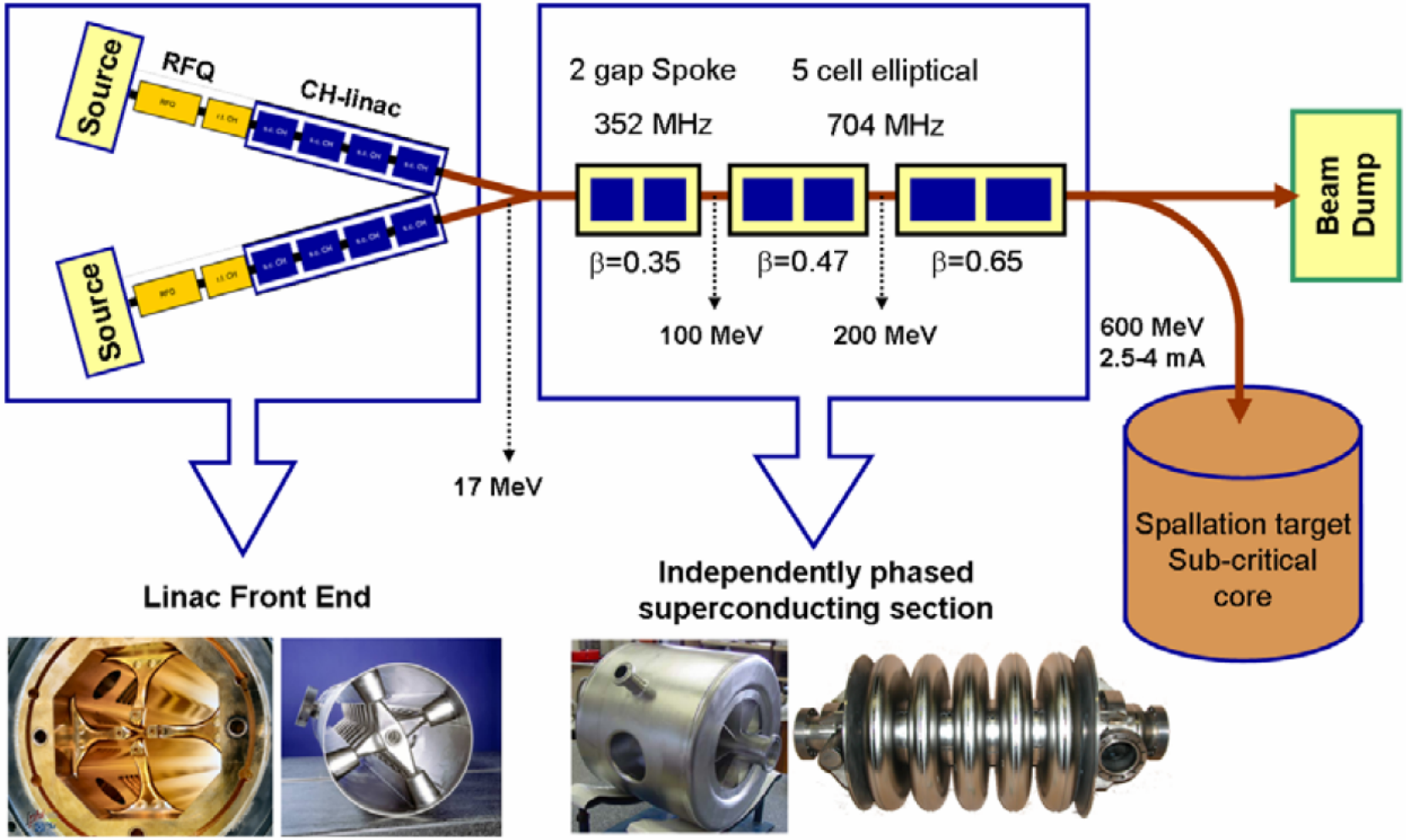
Source
RFQ
CH-linac
Source
2 gap Spoke
352 MHz
5 cell elliptical
704 MHz
β=0.35
β=0.47
β=0.65
100 MeV
200 MeV
17 MeV
600 MeV
2.5-4 mA
Beam Dump
Spallation target
Sub-critical
core
Linac Front End
Independently phased
superconducting section

Spoke Cavity Integrated Tests (Orsay)

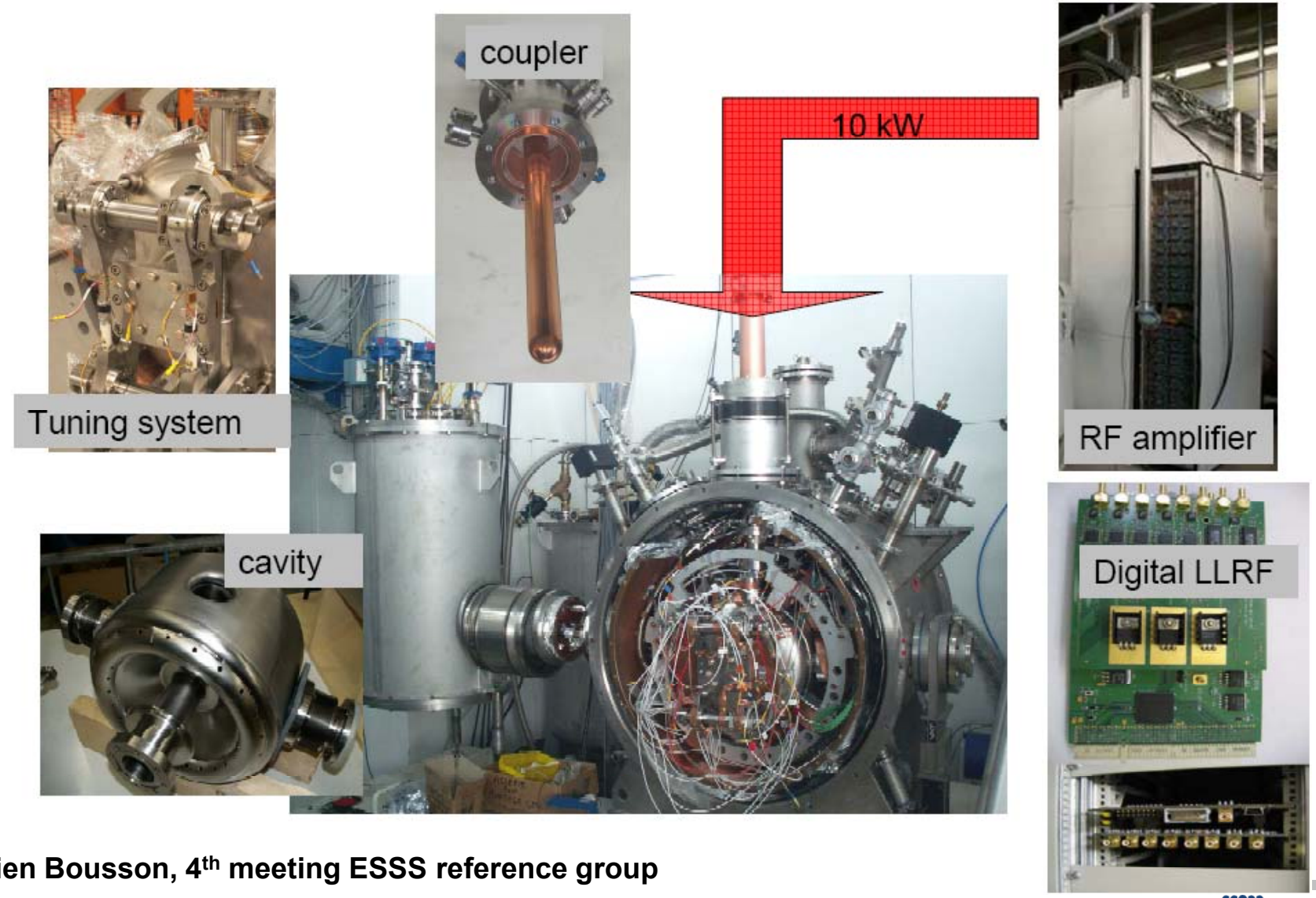

Sebastien Bousson, 4th meeting ESSS reference group

Fermilab Project X

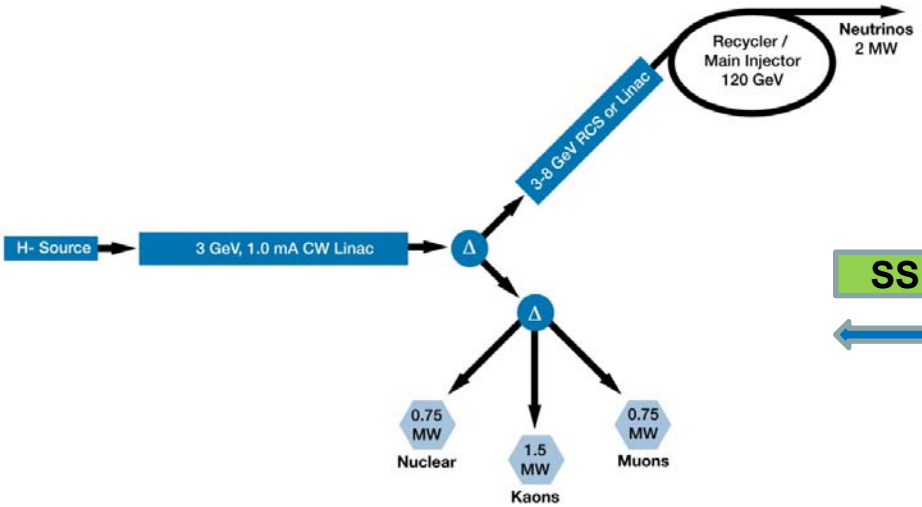

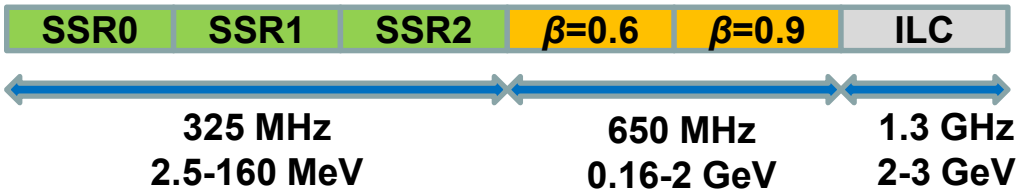

Section	Freq	Energy (MeV)	Cav/mag/CM	Type
SSR0 (β_G=0.11)	325	2.5-10	26 /26/1	SSR, solenoid
SSR1 (β_G=0.22)	325	10-32	18 /18/ 2	SSR, solenoid
SSR2 (β_G=0.4)	325	32-160	44 /24/ 4	SSR, solenoid
LB 650 (β_G=0.61)	650	160-520	42 /21/ 7	5-cell elliptical, doublet
HB 650 (β_G=0.9)	650	520-2000	96 /12/12	5-cell elliptical, doublet
ILC 1.3 (β_G=1.0)	1300	2000-3000	64 / 8/ 8	9-cell elliptical, quad

Fermilab Project X

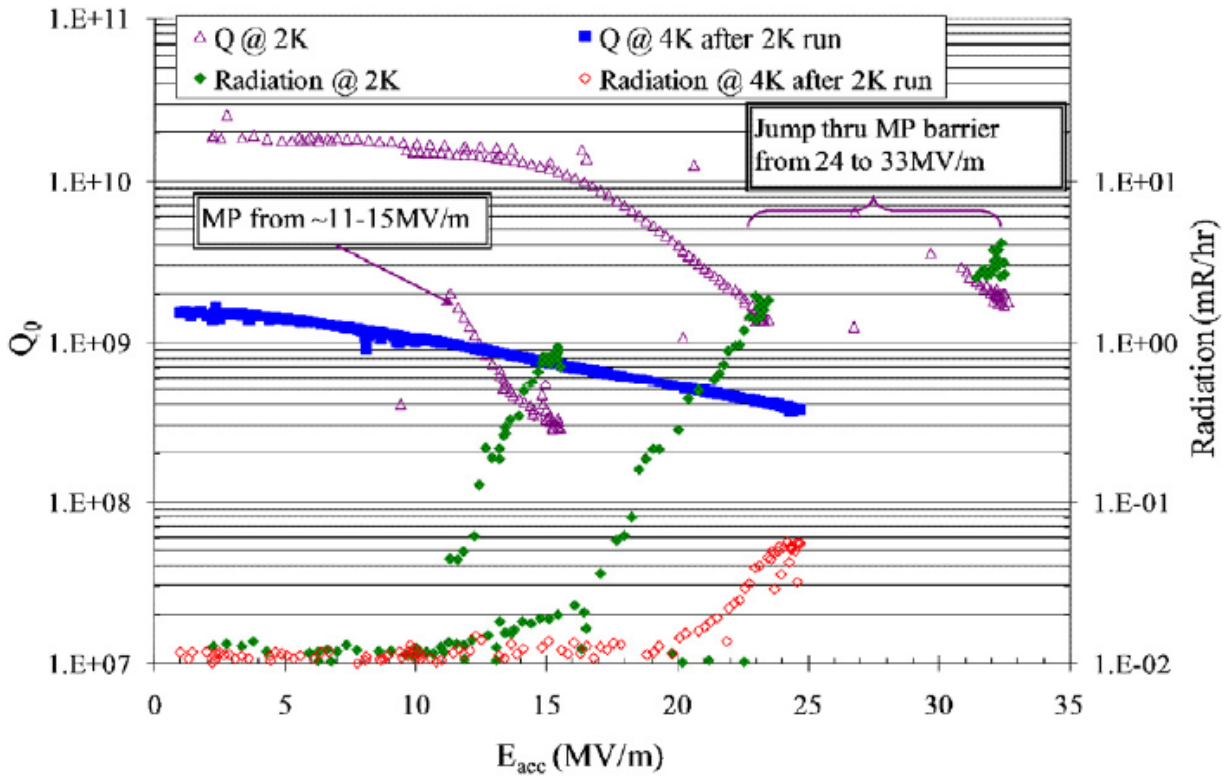

325 MHz, β=0.22

European Spallation Source

Bilbao 2009 concept

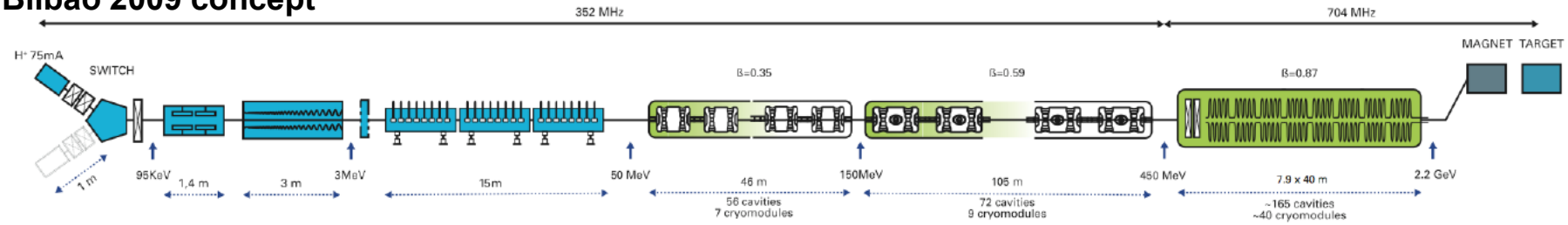

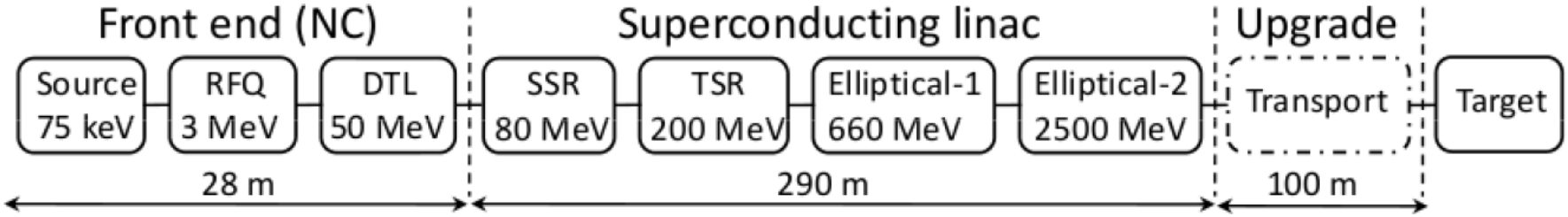

Scandinavia 2009 concept

System	T [K]	Energy [MeV]	Freq. [MHz]	β v/c	Length [m]
Source	300	0.075	–	–	2.5
LEBT	300	–	–	–	1.1
RFQ	300	3	352.2	–	4.0
MEBT	300	–	352.2	–	1.1
DTL	300	50	352.2	–	19.2
SSR	4	80	352.2	0.35	23.3
TSR	4	200	352.2	0.50	48.8
Ellipt-1	2	660	704.4	0.65	61.7
Ellipt-2	2	2500	704.4	0.92	154.0

European Spallation Source

2010 concept

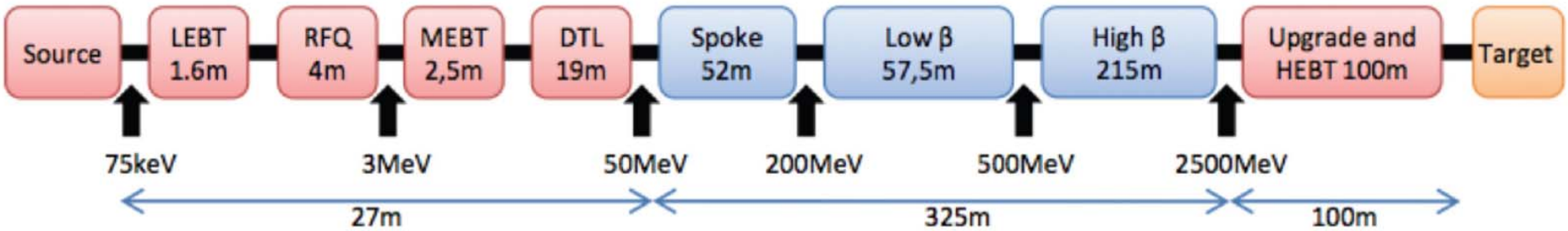

Table 1: Primary ESSS performance parameters in the long pulse conceptual design. There is no accumulator ring.

INPUT		**Nominal**	**Upgrade**
Average beam power	[MW]	5.0	7.5
Macro-pulse length	[ms]	2.0	2.0
Pulse repetition rate	[Hz]	20	20
Proton kinetic energy	[GeV]	2.5	2.5
Peak coupler power	[MW]	1.0	1.0
Beam loss rate	[W/m]	< 1.0	< 1.0
OUTPUT			
Duty factor		0.04	0.04
Ave. pulse current	[mA]	50	75
Ion source current	[mA]	60	90
Total linac length	[m]	418	418

System	Energy MeV	Freq. MHz	β_{Geo}	No. of modules	Length m
Source	0.075	–	–	–	2.5
LEBT	0.075	–	–	–	1.6
RFQ	3	352.2	–	1	4.0
MEBT	3	352.2	–	–	2.5
DTL	50	352.2	–	3	19
Spokes	200	352.2	0.45	14	52
Low β	500	704.4	0.63	10	57
High β	2500	704.4	0.75	19 (21*)	215

*High power LINAC

How High Can We Go with β_g in Spoke Cavities?

- What are their high-order modes properties?
  - Spectrum
  - Impedances
  - Beam stability issues
- Is there a place for spoke cavities in high-β high-current applications?
  - FELs, ERLs
  - Higher order modes extraction

How High Can We Go with β_g in Spoke Cavities?

- **Activities in this area are finally starting**
  - **325 and 352 MHz, β= 0.82 and 1**

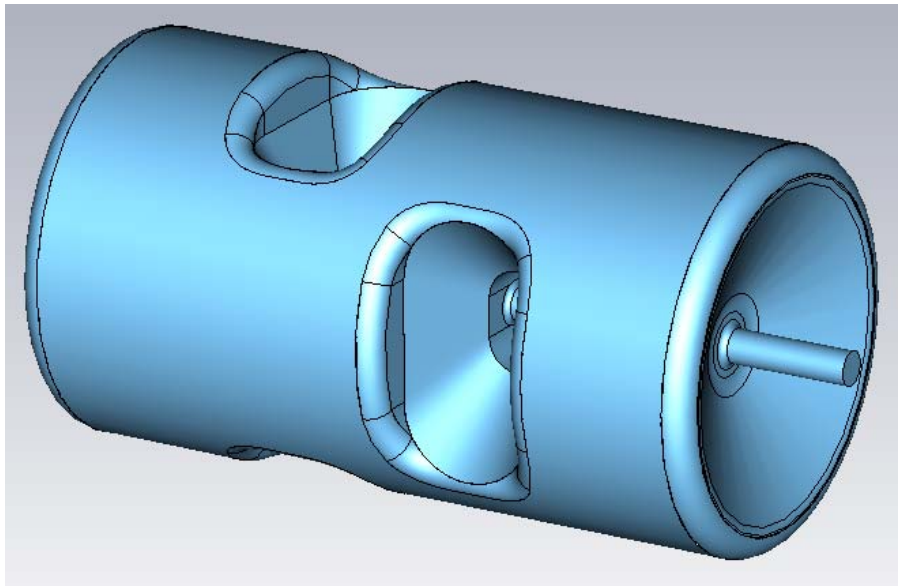

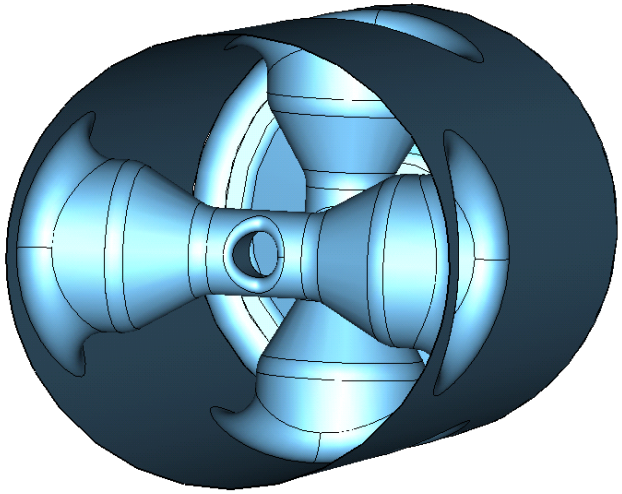

SC cavities covering the velocity range 0.12 < β < 0.8 developed for the RIA driver linac and will be used in AEBL

115 MHz β=0.15
Steering-corrected QWR

172.5 MHz
β=0.28 HWR

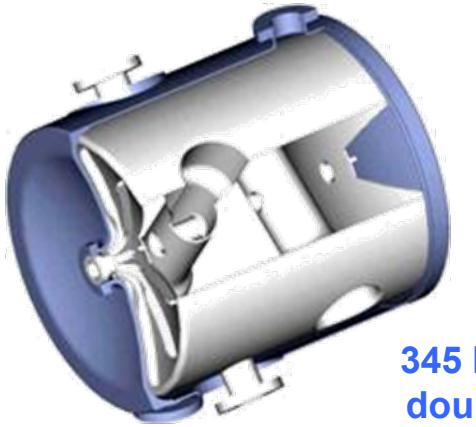

345 MHz β=0.4
double-spoke

345 MHz β=0.5

Triple-spoke

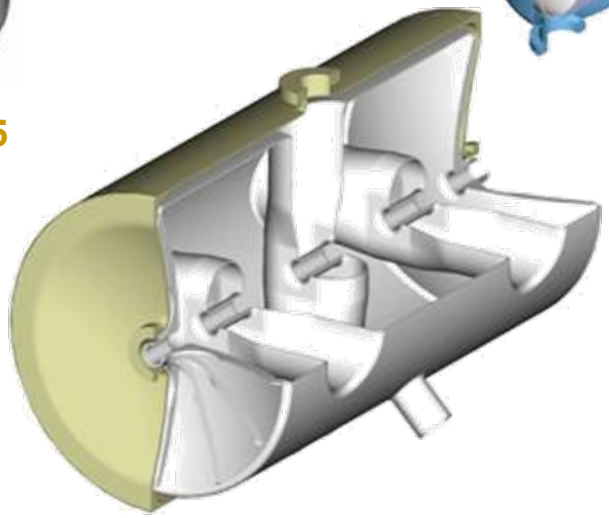

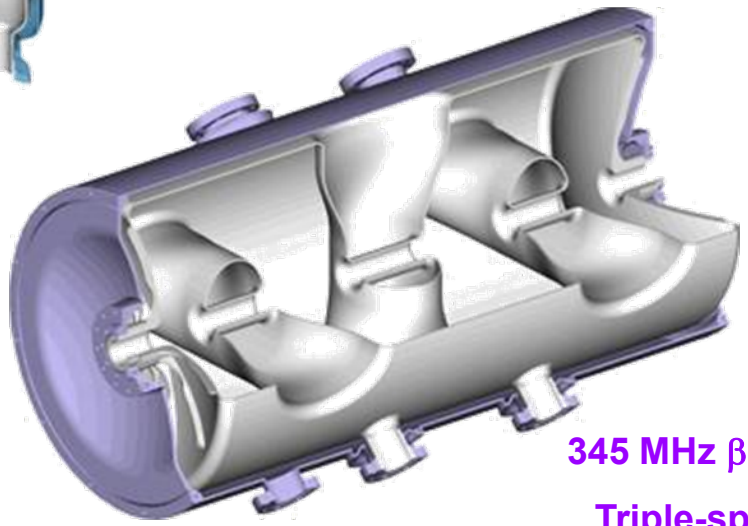

345 MHz β=0.62

Triple-spoke

Courtesy P. Ostroumov and K. Shepard

ANL extended to TEM-class SC cavities the very high-performance techniques pioneered by TESLA

Courtesy P. Ostroumov and K. Shepard

Effects of interstitial hydrogen on triple-spoke cavity performance

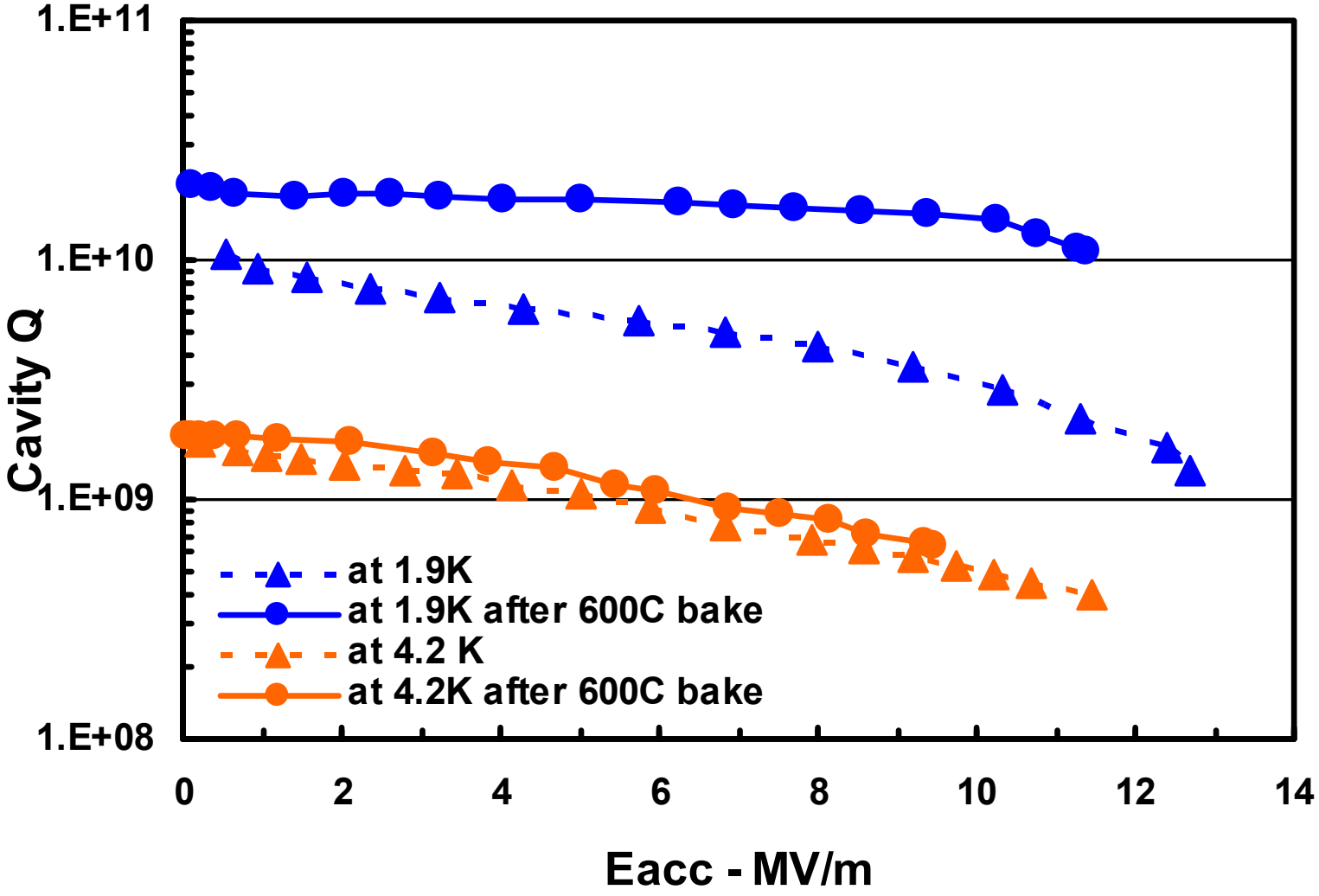

Courtesy P. Ostroumov and K. Shepard

Resonators for FRIB @ MSU

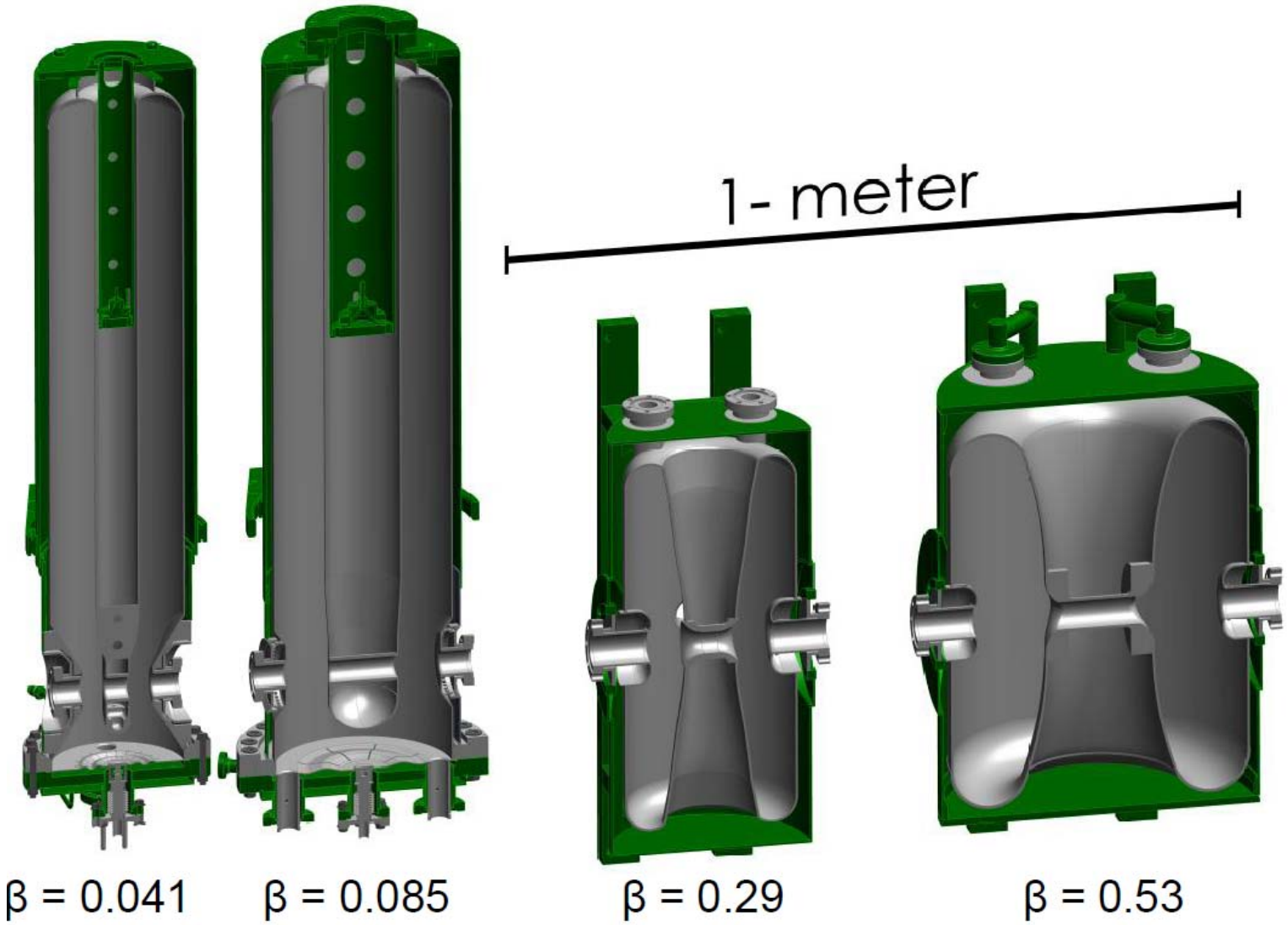

Resonators for FRIB

Type	λ/4	λ/4	λ/2	λ/2
β_{opt}	0.041	0.085	0.29	0.53
f (MHz)	80.5	80.5	322.0	322.0
V_a (MV)	0.81	1.62	1.90	3.70
E_p (MV/m)	30.0	31.5	31.5	31.5
B_p (mT)	53	71	75	77
R/Q (Ω)	433	408	202	219
G (Ω)	15	18	59	101
Design Q_0	5×10^8	5×10^8	6.1×10^9	1.0×10^{10}
Aperture (mm)	30	30	30	40
T (K)	4.5	4.5	2.0	2.0
Maximum ϕ_s	−26.5°	−23.5°	−32.0°	−25.0°

Resonators for FRIB

β = 0.041 Resonators [2]

Stiffening elements

Resonator with helium vessel, tuning plate, and bottom flange

Prep for Dewar

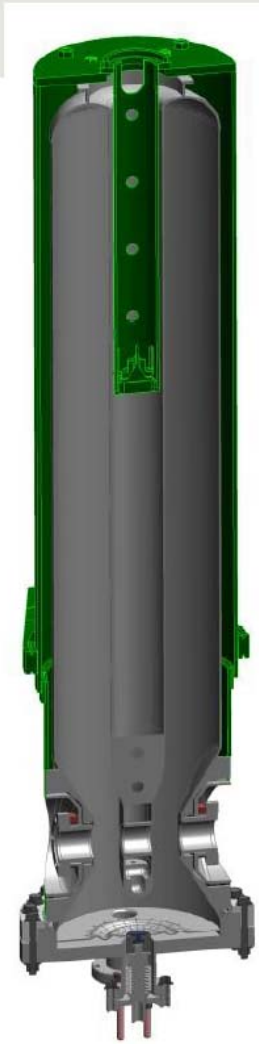

Resonators for FRIB

β = 0.085 Resonators
RIA Prototype

Sub-assemblies

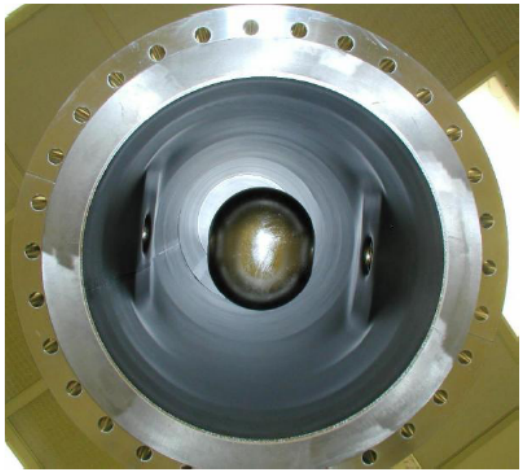

Completed resonator

Prep for Dewar

Resonators for FRIB

β = 0.29 Resonators
RIA Prototype

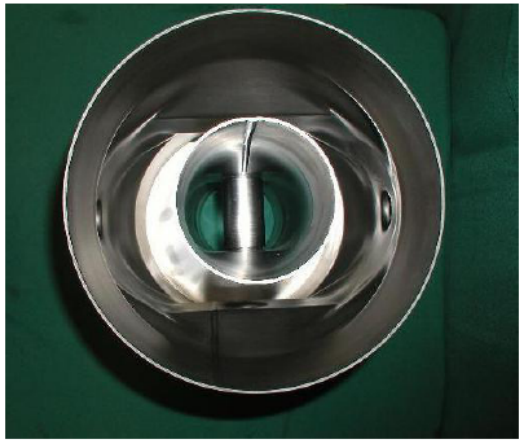

Sub-assemblies

Prep for Dewar

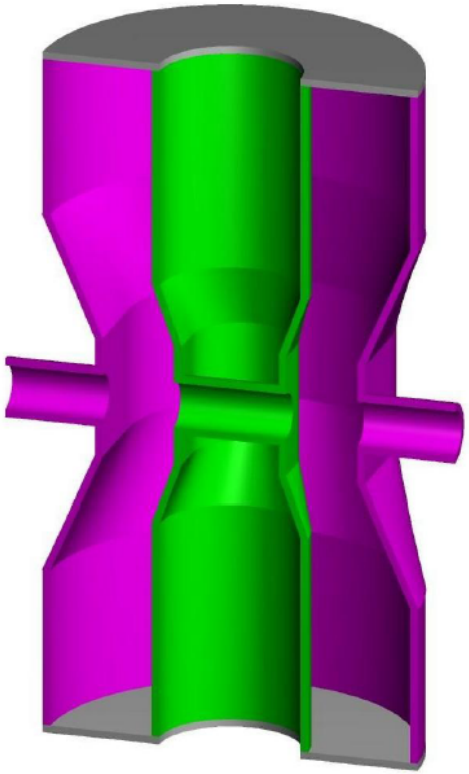

Resonators for FRIB

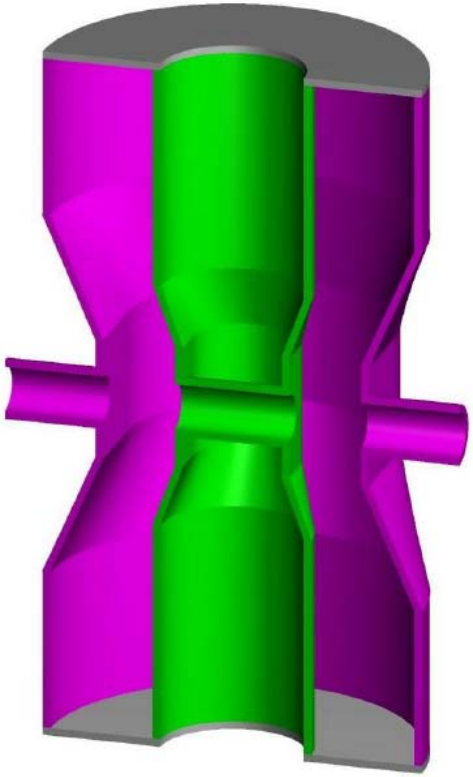

First Generation

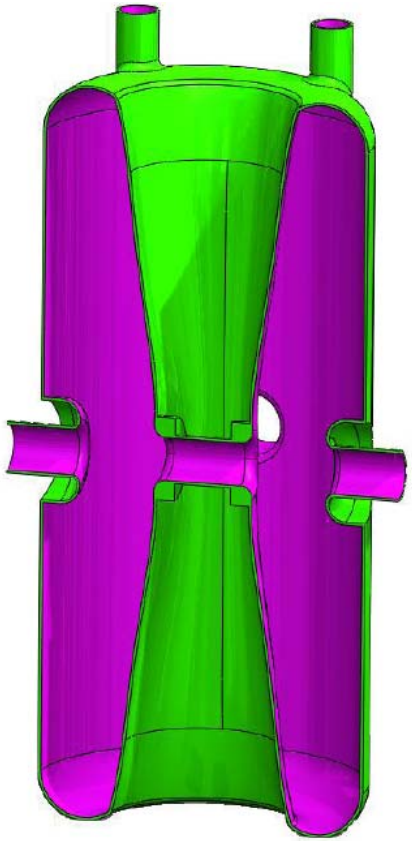

Second Generation

Generation	First	Second
β_{opt}	0.285	0.290
f (MHz)	322.0	322.0
V_a (MV)	1.9	1.9
E_p (MV/m)	30	31.5*
B_p (mT)	83	75
R/Q (Ω)	199	202
G (Ω)	61	59
Design Q_0	6.1×10^9	6.1×10^9
Aperture (mm)	30	30
U (joules)	8.9	8.8
$\lvert df/dP \rvert$ (Hz/mbar)	198	≤ 2*

*Value is being finalized

Resonators for FRIB

β = 0.53 Resonators [2]

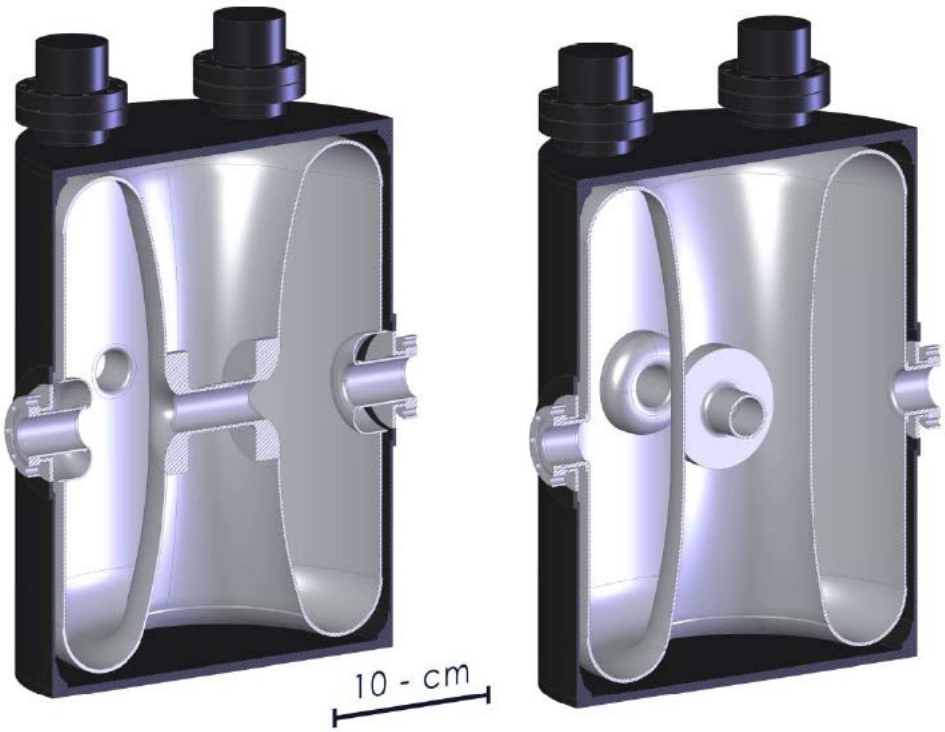

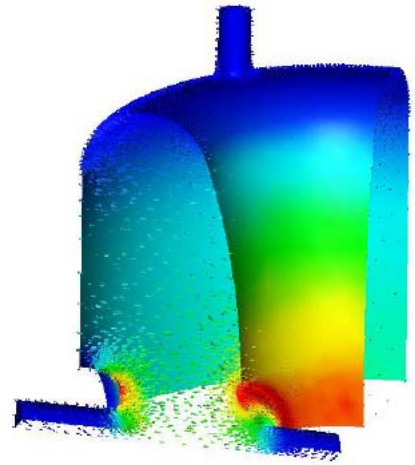

Electric field

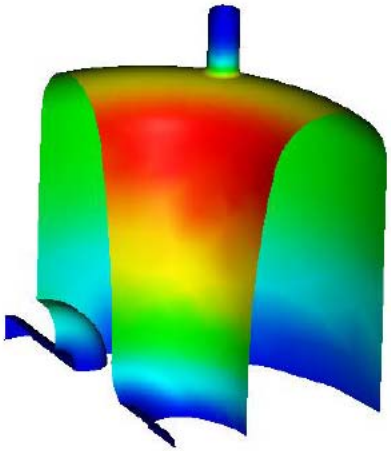

Magnetic field

rf design with doughnuts and rinse ports

Resonators for FRIB

β = 0.53 Resonators
Niobium Prototype [1]

Nb parts

Completed resonator

Resonators for Crabbing and Deflecting

4-rod resonator
Lancaster University/Cockcroft Institute

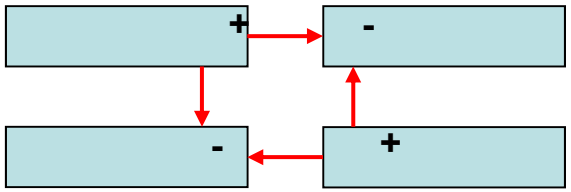

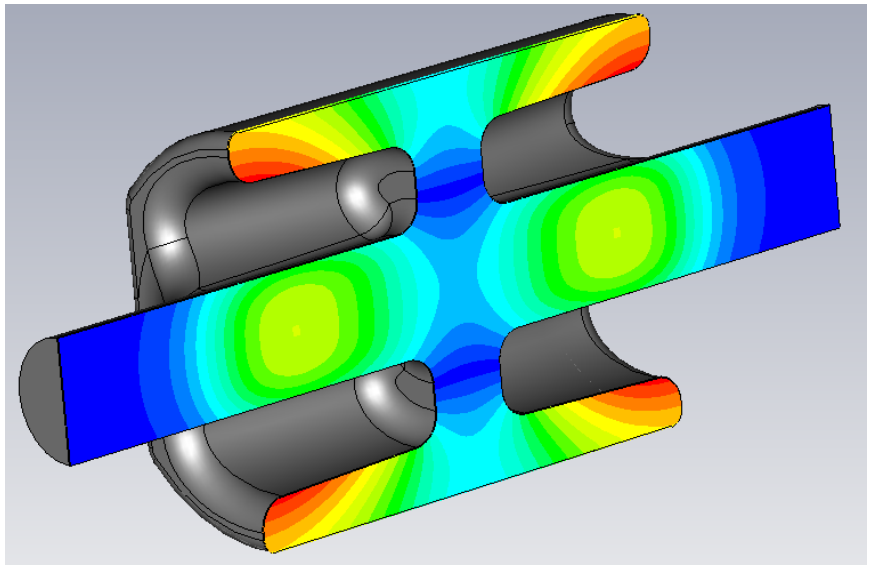

B field

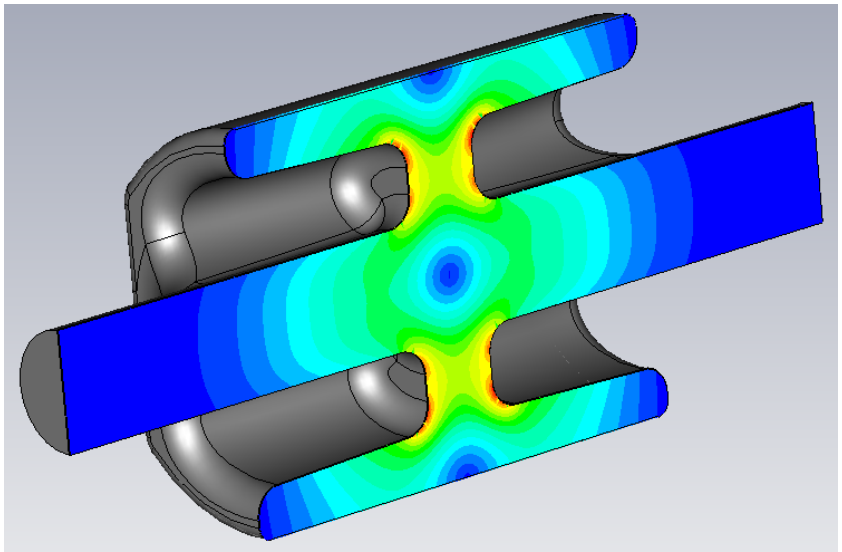

E field

Resonators for Crabbing and Deflecting

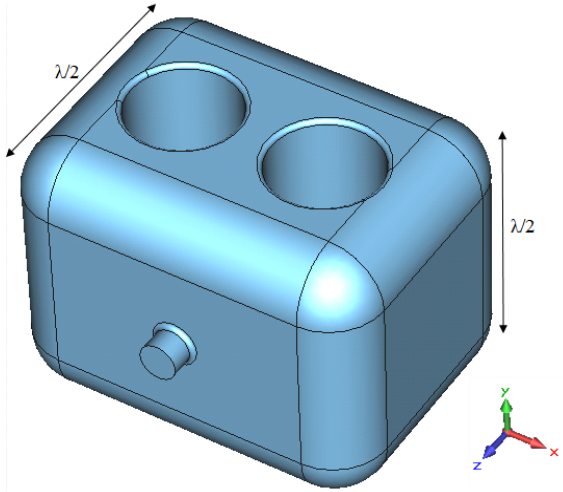

Parallel-Bar
Old Dominion University

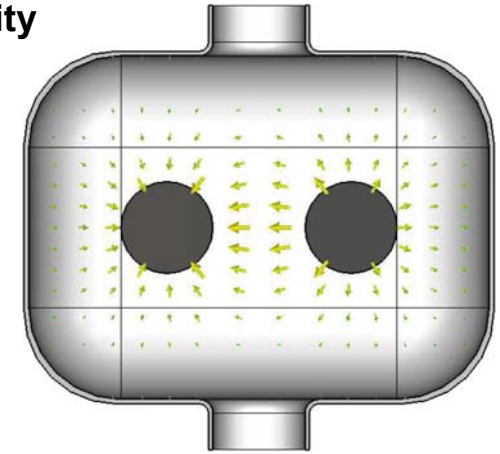

E field on mid plane
(Along the beam line)

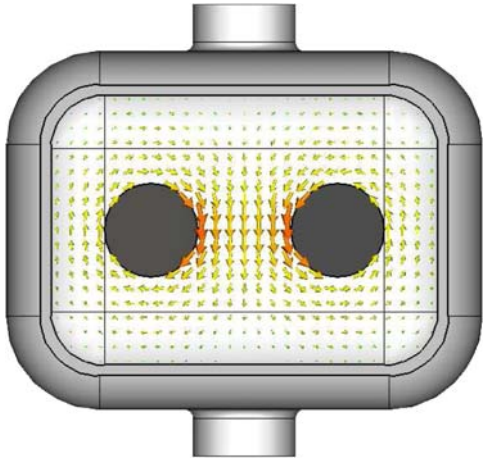

B field on top plane

Resonators for Crabbing and Deflecting

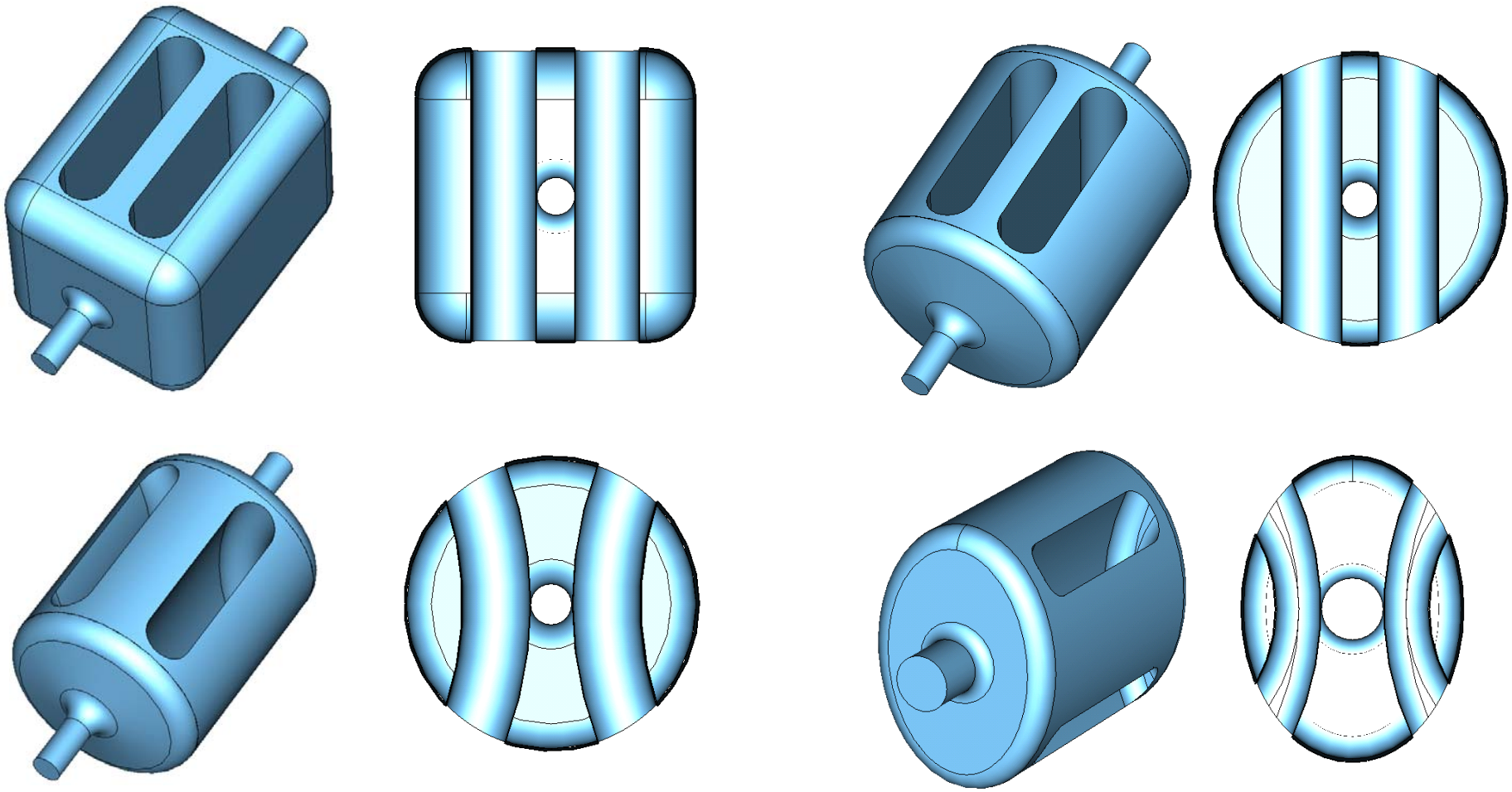

Parallel-bar Resonators – Old Dominion University

Parting Words

In the last ~40 years, the development of TEM-class superconducting cavities has been one of the richest and most imaginative area of srf

- The field has been in perpetual evolution and progress
- New geometries are constantly being developed
- The final word has not been said

The parameter, tradeoff, and option space available to the designer is large

- The design process is not, and probably will never be, reduced to a few simple rules or recipes
- There will always be ample opportunities for imagination, originality, and common sense