Neutrino Factory Overview: Challenges and R&D Status

Michael S. Zisman
Center for Beam Physics
Accelerator & Fusion Research Division
Lawrence Berkeley National Laboratory

Intensity Frontier Workshop-Rockville, MD
December 1, 2011

Introduction

- Discovery of neutrino oscillations led to strong interest in providing intense beams of accelerator-produced neutrinos
  - such a facility may be able to observe CP violation in the lepton sector
    - possibly the reason we're all here
- A "Neutrino Factory" has been proposed for providing the required neutrino beams
  - based on the decays of a stored muon beam
    - could serve as precursor to eventual Muon Collider
- Design work presently being carried out internationally
  - under auspices of International Design Study for a Neutrino Factory (IDS-NF)
  - in U.S., work coordinated by Muon Accelerator Program (MAP)

Muon Accelerator Advantages

- **Muon-beam accelerators can address several of the outstanding accelerator-related particle physics questions**
  - **neutrino sector**
    - **Neutrino Factory beam properties**

$$\mu^+ \rightarrow e^+ \nu_e \bar{\nu}_\mu \Rightarrow 50\% \nu_e + 50\% \bar{\nu}_\mu$$

$$\mu^- \rightarrow e^- \bar{\nu}_e \nu_\mu \Rightarrow 50\% \bar{\nu}_e + 50\% \nu_\mu$$

Produces high energy ν_e, above τ threshold

    - **decay kinematics well known**
      - **minimal hadronic uncertainties in the spectrum and flux**
    - **$\nu_e \rightarrow \nu_\mu$ oscillations give easily detectable "wrong-sign" μ (low background)**

Unmatched sensitivity for CP violation, mass hierarchy, and unitarity

  - **energy frontier**
    - **point particle makes full beam energy available for particle production**
      - **couples strongly to Higgs sector**
    - **Muon Collider has almost no synchrotron radiation or beamstrahlung**
      - **narrow energy spread at IP compared with e^+e^- collider**
      - **reuses expensive RF equipment (circular $\Rightarrow$ fits on existing Lab sites)**

NF Technical Challenges

- **Muons created as tertiary beam ($p \rightarrow \pi \rightarrow \mu$)**
  - low production rate
    - need target that can tolerate multi-MW beam
  - large energy spread and transverse phase space
    - need emittance cooling
    - high-acceptance acceleration system and decay ring
- **Muons have short lifetime (2.2 μs at rest)**
  - puts premium on rapid beam manipulations
    - high-gradient RF cavities (in magnetic field for cooling)
      - field causes degradation in allowable gradient
    - presently untested ionization cooling technique
    - fast acceleration system

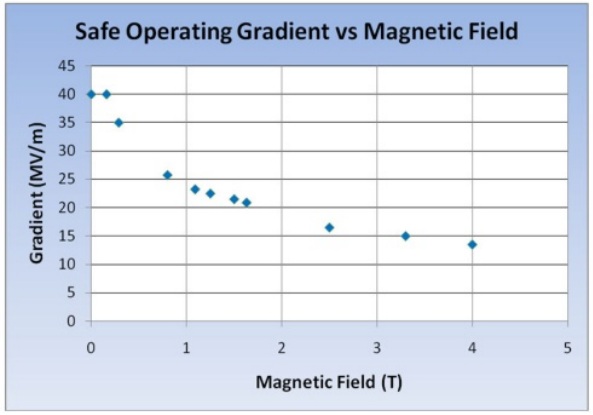

If intense muon beams were easy to produce, we'd already have them!

Neutrino Factory

- Neutrino Factory comprises these sections
  - Proton Driver
    - primary beam on production target ⇒ HARP
  - Target, Capture, and Decay
    - create π; decay into μ ⇒ MERIT
  - Bunching and Phase Rotation
    - reduce ΔE of bunch
  - Cooling
    - reduce transverse emittance ⇒ MICE
  - Acceleration
    - 130 MeV → 20-40 GeV with RLAs or FFAGs ⇒ EMMA
  - Decay Ring
    - store for ~1000 turns; long straights

IDS-NF baseline design

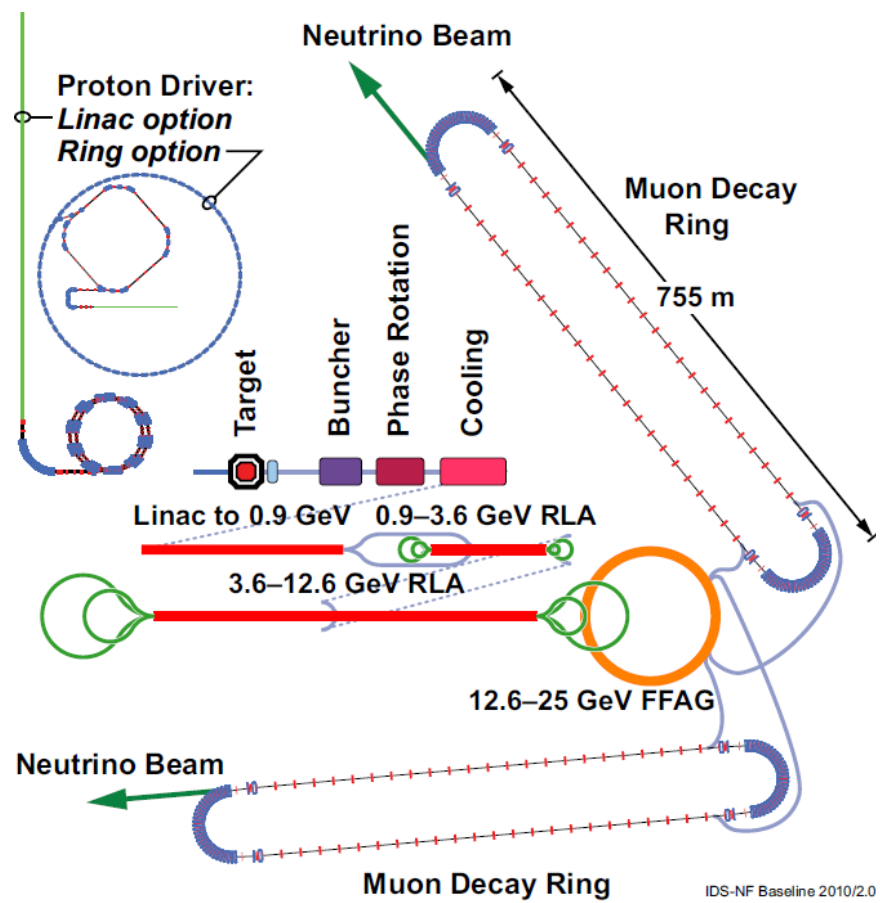

Low Energy Neutrino Factory

- Alternative 4 GeV NF design being explored at Fermilab
  - motivated by
    - expectation of reduced facility cost
    - *E* matched to Fermilab-Homestake baseline
    - detector concept (magnetized TASD) capable of required performance at chosen energy
  - ingredients same as IDS-NF design…but fewer of them
    - less acceleration; smaller decay ring; single baseline

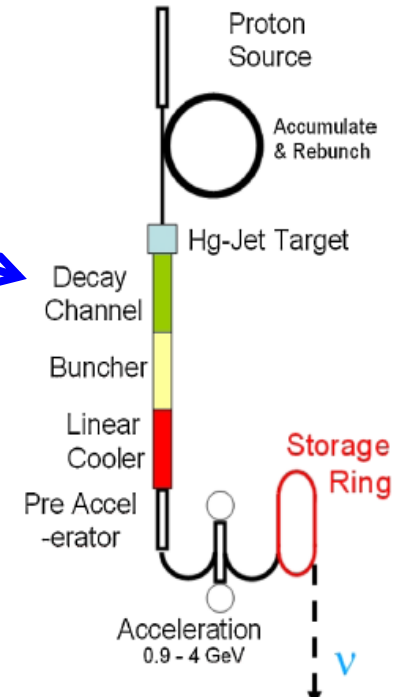

- "Starter" version for ν cross section measurements also considered
  - no cooling, no acceleration
    - built with *today's* technologies
  - allows R&D on decay ring instrumentation

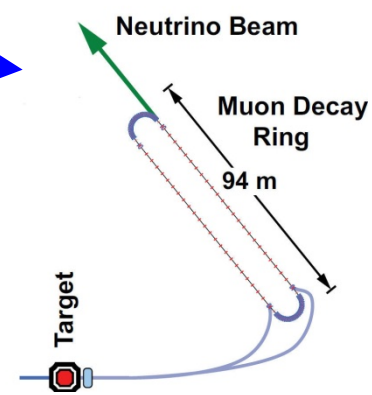

Considerations of Large θ_{13}

- Large θ_{13} has implications for future facilities
  - in this regime, systematics will be key to CP measurement
  - superbeams (only ν_μ) cannot determine effective cross section ratios
    - $\sigma_\mu \varepsilon_\mu / \sigma_e \varepsilon_e$ (and its anti-neutrino counterpart)
- For NF, lower beam energy and single baseline suffice (Huber)
  - a low intensity NF (5-10% of nominal NF intensity) performs as well as the best superbeam
    - start with no muon cooling
    - existing FNAL p infrastructure
    - upgrade later to full intensity

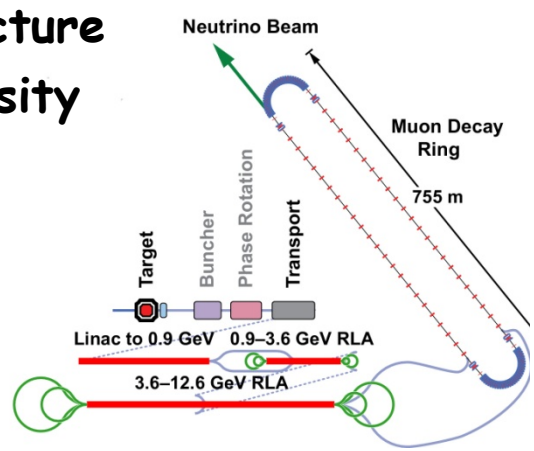

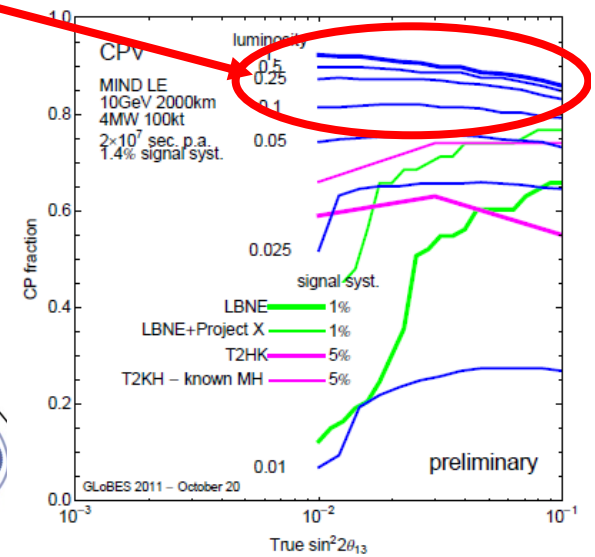

R&D Activities

- To transform challenges to scientific opportunities, worldwide R&D effort is under way
  - under IDS-NF auspices
    - U.S. contributions to these studies via MAP
  - main items:
    - target
    - RF (MuCool)
    - cooling (MICE)

Targetry R&D

- Favored target concept based on Hg jet in 20-T solenoid
  - jet velocity of ~20 m/s establishes "new" target each beam pulse
    - magnet shielding requirement daunting, but manageable
- MERIT serves as satisfactory proof-of-principle of Hg-jet concept
    - carried out (2007) in collaboration with CERN and RAL
    - concluded that power handling of target is adequate
      - 4 MW design value should be achievable
      - no damage to containment vessel from 60 m/s filaments

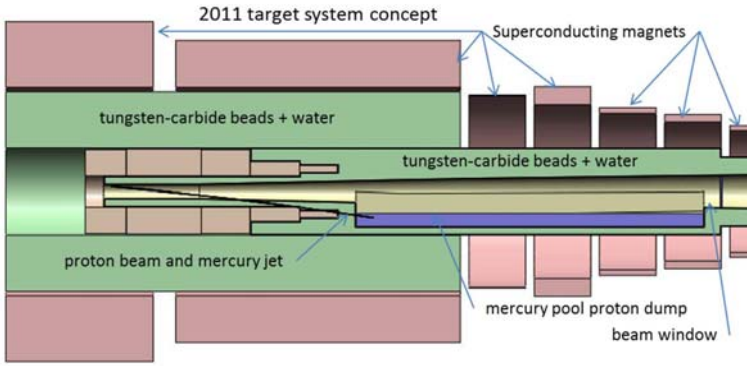

Hg-jet target

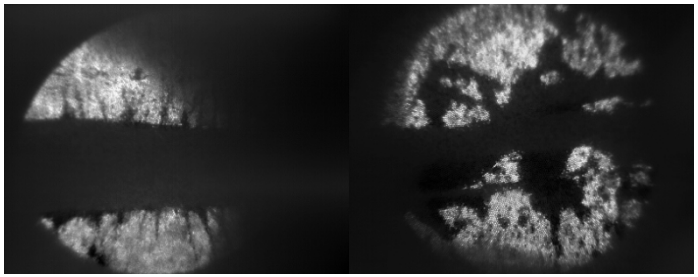

During After
10 Tp

MuCool R&D

- **Continue assessment of alternative RF technologies**
  - goal: identify ≥1 approach to eliminate (or reduce to acceptable level) gradient degradation in magnetic field
    - vacuum cavities
      - reduce or eliminate surface electric field enhancements
        - studying processing and coating techniques
      - materials studies
        - look for materials resistant to damage (Be looks interesting)
    - high-pressure gas-filled RF ("HPRF") cavities (okay in magnetic field)
      - use beam tests to see if gas breaks down with intense beam
        - tests done at Fermilab MuCool Test Area

First indications: severe beam loading but no sign of breakdown

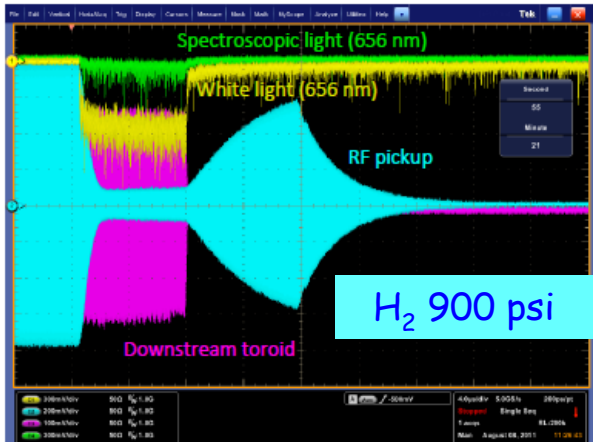

MuCool NCRF Results

- 201-MHz cavity shows degradation
  - reached 21 MV/m without magnetic field
  - initial tests in fringe field of 5-T solenoid give reduced gradient
    - and lots of scatter (coupler issue?)
  - awaiting coupling coil to achieve realistic field

201 MHz cavity

5-T solenoid

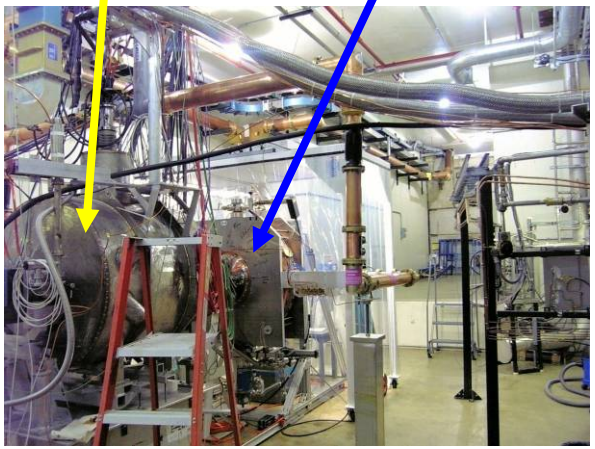

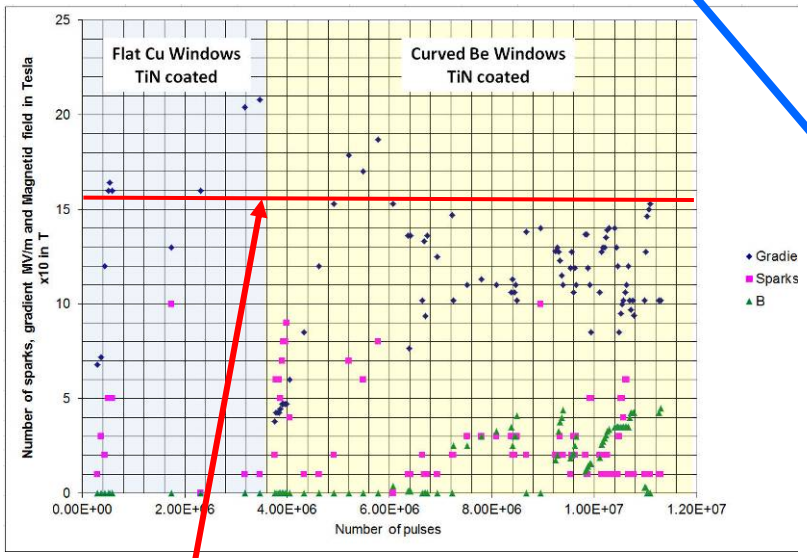

Design Gradient

201 MHz cavity

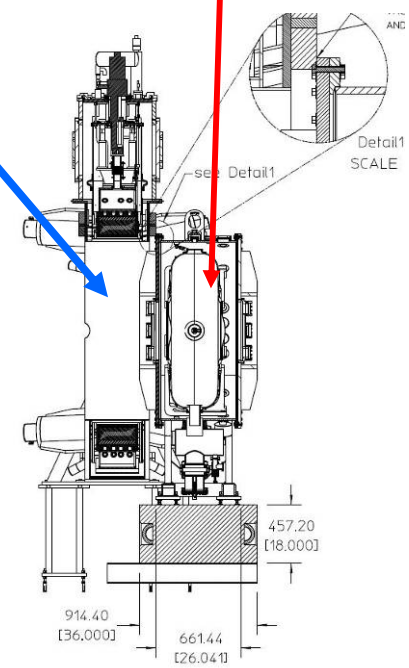

MICE

- MICE cooling demonstration aims to:
  - design, engineer, and build a section of cooling channel capable of giving the desired performance for a Neutrino Factory
  - place this apparatus in a muon beam and measure its performance in a variety of modes of operation and beam conditions
  - show that design tools (simulation codes) agree with experiment
    - gives confidence that we can optimize design of an actual facility
- MICE includes one cell of the FS2 cooling channel
  - three Focus Coil (FC) modules with absorbers (LH_2 or solid)
  - two RF-Coupling Coil (RFCC) modules (4 cavities per module)
  - plus two Spectrometer Solenoids with scintillating fiber tracking detectors
    - other detectors for confirming particle ID and timing (determining phase wrt RF and measuring longitudinal emittance)
      - TOF, Cherenkov, Calorimeter

Experiment sited at RAL

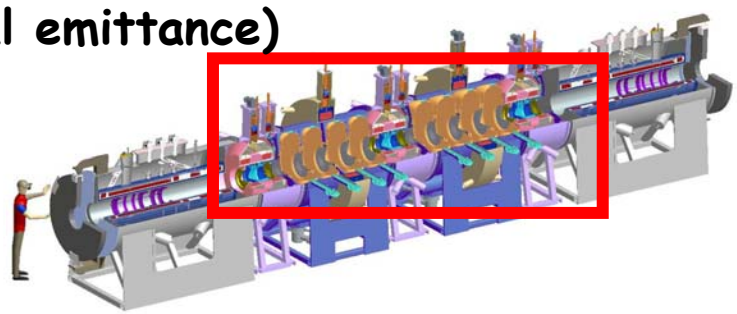

MICE Contributors

- Many international partners contributing

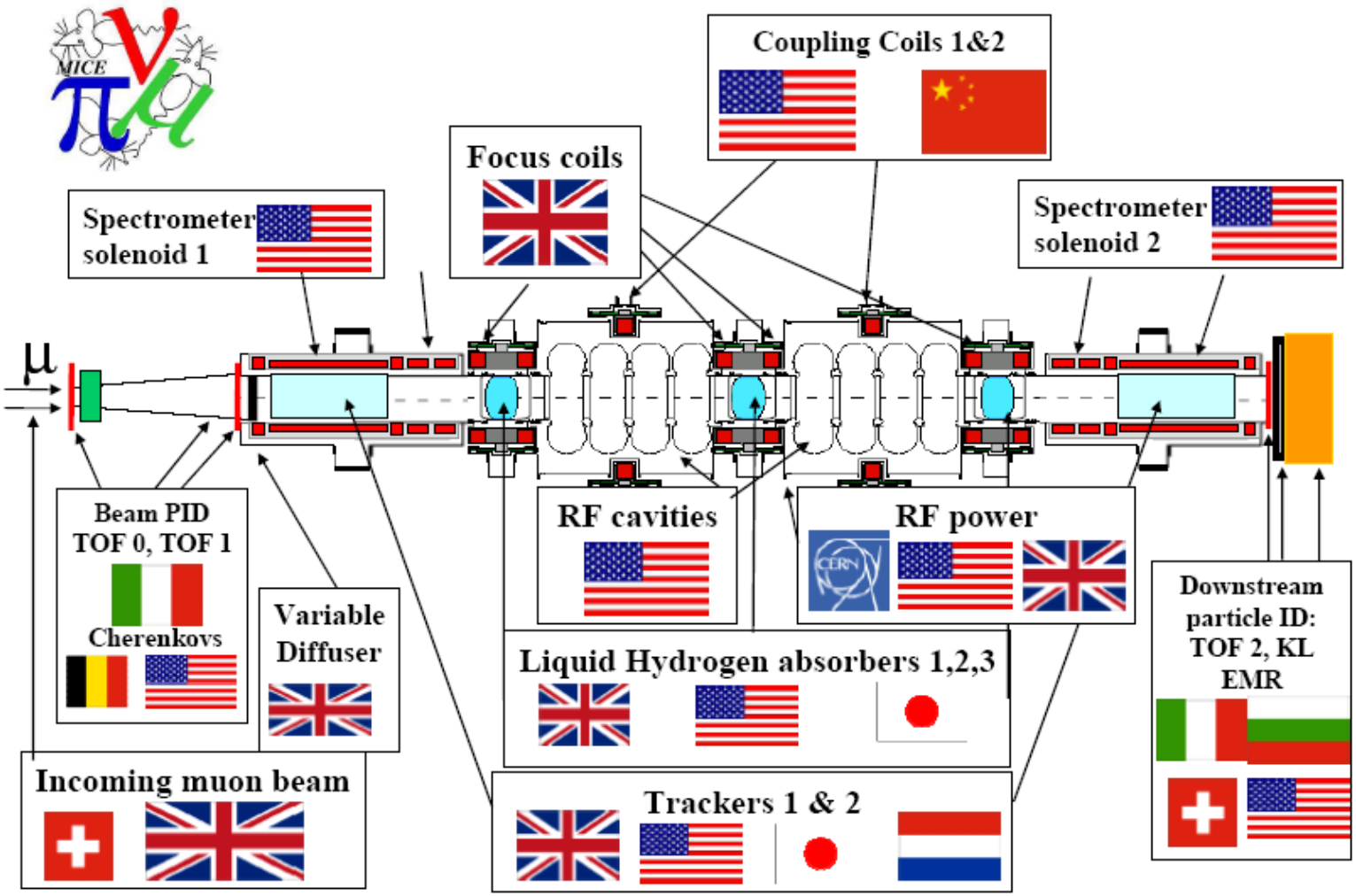

Status of MICE

- **Beam line commissioned**
  - **paper describing results in preparation**
- **All cooling channel components are now in production**

Spectrometer Solenoid (Wang NMR)

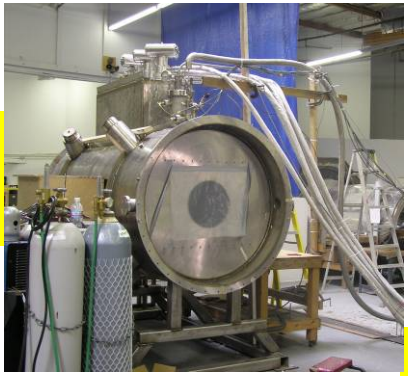

CC completed coil (Qi Huan Co.)

Absorber (KEK)

Absorber window (U-Miss)

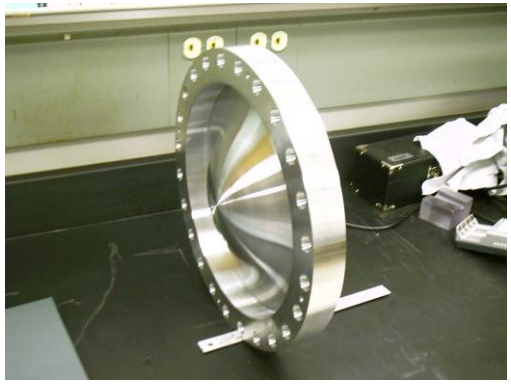

Cavity at LBNL (Applied Fusion)

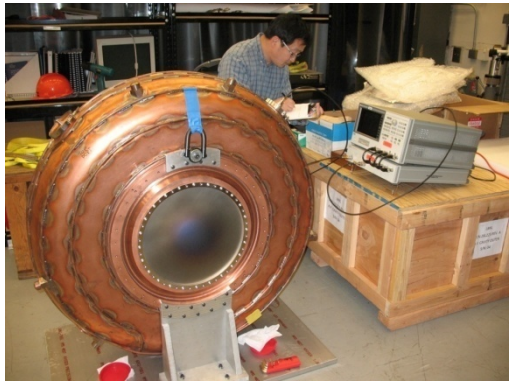

FC (Tesla Eng., Ltd.)

Summary

- Substantial progress being made toward design of muon-based neutrino facilities to study CP violation in the lepton sector
  - challenges are being understood and overcome
    - work extends state-of-the-art in accelerator science
- The Neutrino Factory is the optimal path toward a full understanding of the neutrino sector
  - and offers the potential of being a step toward a future energy frontier collider as well
- Thanks to all my accelerator colleagues in EUROnu, IDS-NF, MAP, and MICE for sharing both their expertise and their enthusiasm

Backups

Ionization Cooling (1)

- **Ionization cooling analogous to familiar SR damping process in electron storage rings**
  - energy loss (SR or *dE/dx*) reduces p_x, p_y, p_z
  - energy gain (RF cavities) restores only p_z
  - repeating this reduces $p_{x,y}/p_z$

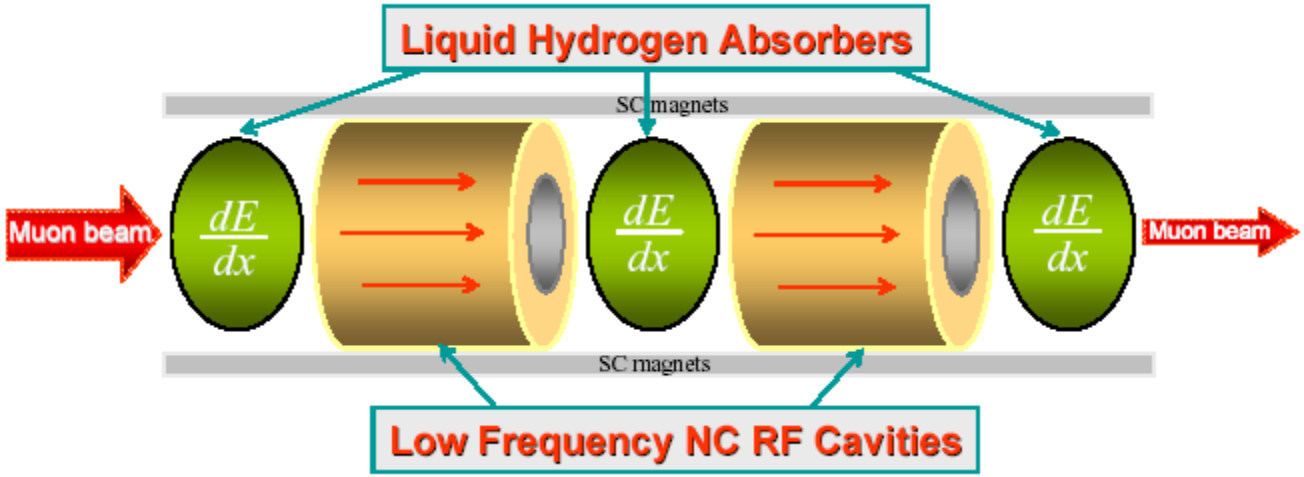

Ionization Cooling (2)

- **There is also a heating term**
  - **for SR it is quantum excitation**
  - **for ionization cooling it is multiple scattering**

- **Balance between heating and cooling gives equilibrium emittance**

$$\frac{d\varepsilon_N}{ds} = -\frac{1}{\beta^2}\left|\frac{dE_\mu}{ds}\right|\frac{\varepsilon_N}{E_\mu} + \frac{\beta_\perp (0.014\,\mathrm{GeV})^2}{2\beta^3 E_\mu m_\mu X_0}$$

Cooling Heating

$$\varepsilon_{x,N,equil.} = \frac{\beta_\perp (0.014\,\mathrm{GeV})^2}{2\beta m_\mu X_0 \left|\frac{dE_\mu}{ds}\right|}$$

  - **prefer low $\beta_\perp$ (strong focusing), large X_0 and dE/ds (H_2 is best)**