Fast Pattern Recognition for High Rate Experiments (2011-047-N0)

- **A challenge: Higgs particle search at the CERN LHC**
  - **~80 million detector channels of the ATLAS experiment**
  - **Event rate of ~100 KHz**
  - **Displaced vertex determination after detailed track reconstruction**

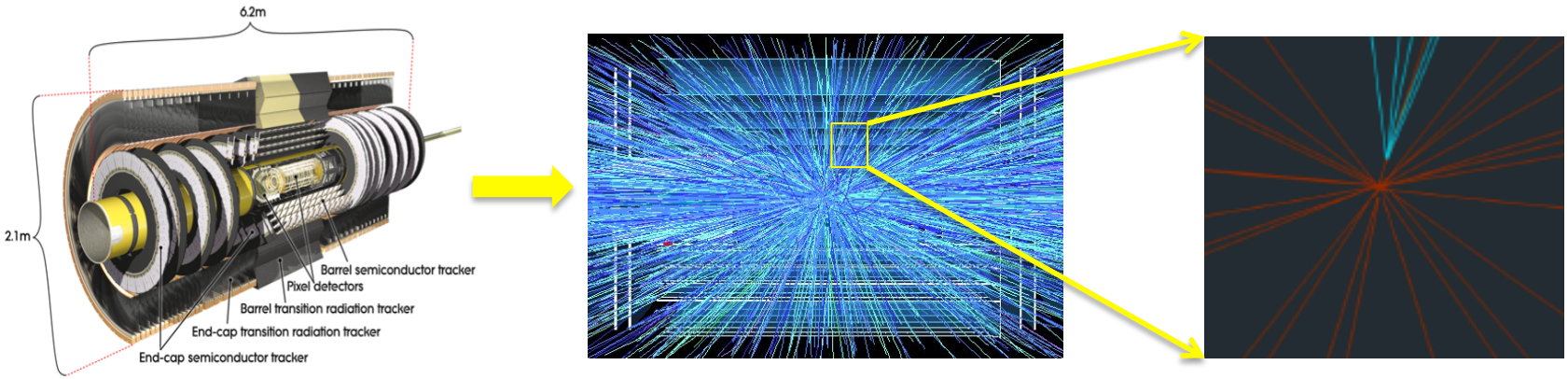

- **Limitation of conventional hardware and software**
  - **Dedicated software running on PC farm**
  - **Intrinsically a deeply nested iterative search (O(1 s) per event)**

Jinlong Zhang (HEP)

James Proudfoot, Robert Blair, John Anderson

Approach

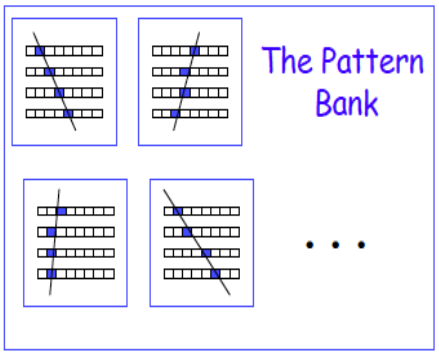

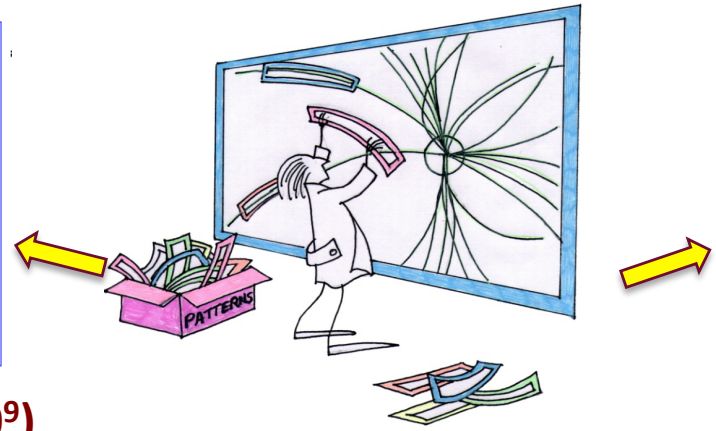

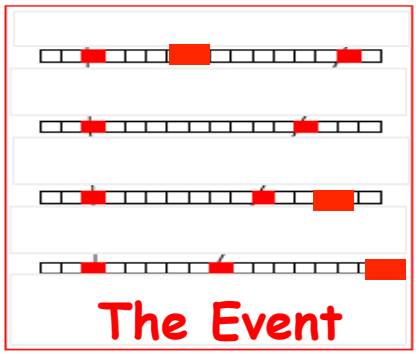

Prestored patterns (10^9)

Hits of the event

Content-addressable Memory (CAM)

Take less than 100 μs to finish the global tracking including the parameter fitting in Digital Signal Processors (DSPs)

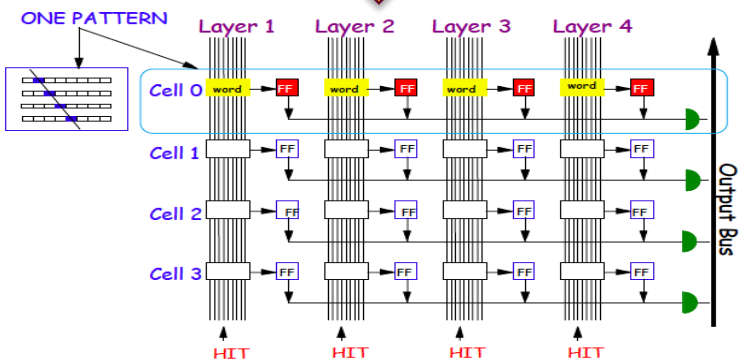

Use Advanced Telecommunications Computing Architecture (ATCA) technology to handle the data throughput

Fast pattern recognition

Project Highlights (Road map)

- **Study the capabilities of the current CAM devices**
- **Perform simulations of a CAM-based track finder for the ATLAS experiment at the LHC**
- **Use ATCA to optimize data input to the CAM**
- **Design and build a demonstrator using CAM technology, and measure its performance**

Cost and Efforts

	2011	2012	2013
Engineering Effort	88.5K	92.6K	72.7K
Software Engineer	18.2K	19.0K	19.9K
Technician	49.0K	51.3K	53.6K
Postdoc	81.4K	85.5K	89.8K
M&S	63.9K	42.6K	21.3K
Total	301.0K	291.0K	257.3K

Summary

- **We propose to build a demonstrator system using CAM technology for fast pattern recognition.**
- **The successful completion of this project would position Argonne to take a lead role in the design and construction of the ATLAS hardware track finder.**
- **This technology is useful for both basic and applied science, such as network routing and filtering, imaging processing and biomedical data mining.**